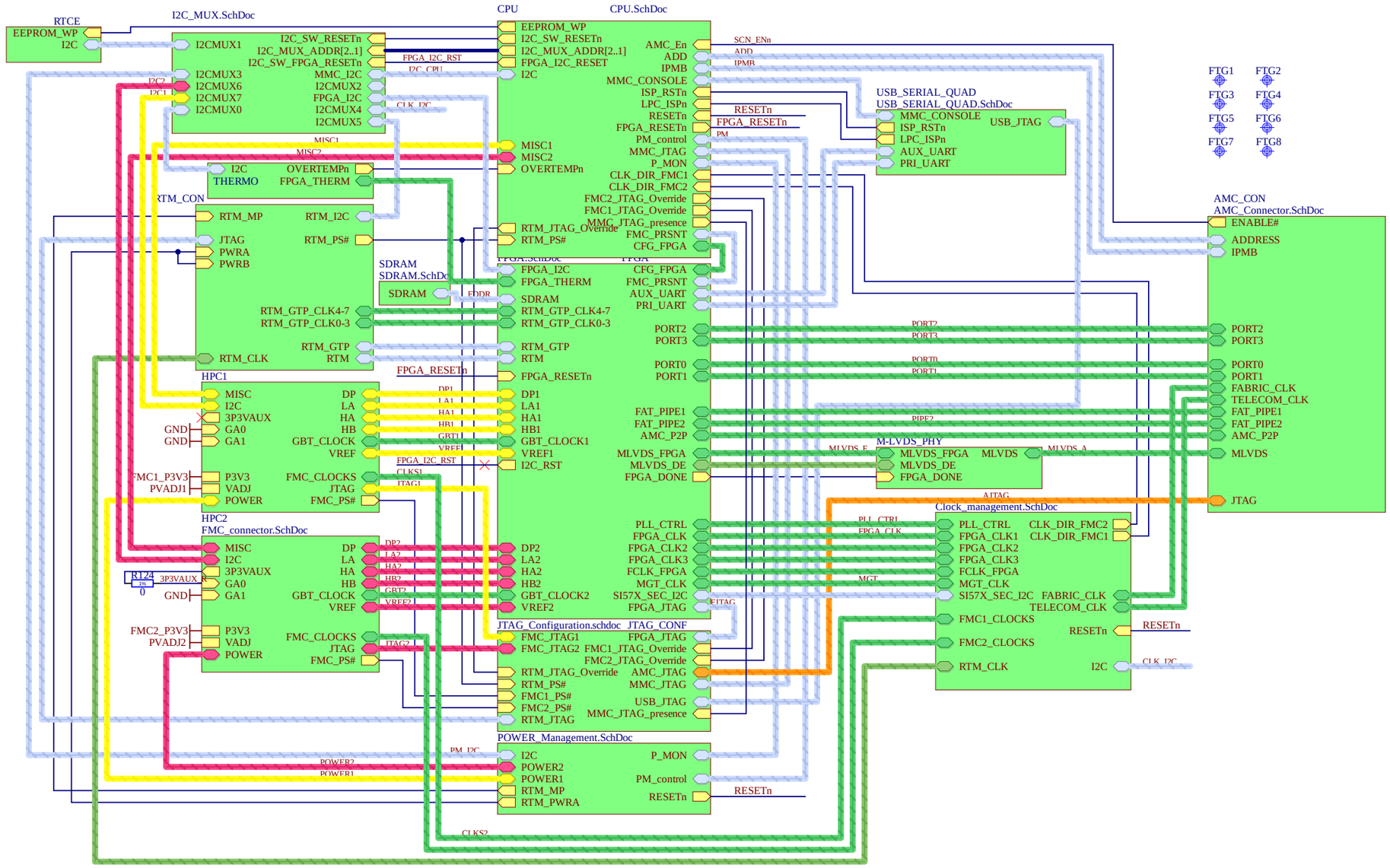

Copyright CNPEM 2013, WUT ISE 2020

This documentation describes Open Hardware and is licensed under CERN OHL v.1.1. You may redistribute and modify this documentation under the terms of the CERN OHL v1.1. (http://ohwr.org/CERNOHL). This documentation is dristributed WITHOUT ANY EXPRESS OR IMPLIED WARRANTY, INCLUDING OF MERCHANTABLITY, SATISFACTORY QUALITY AND FITNESS FOR A PARTICULAR PURPOSE. Please see the CERN OHL v.1.1 for applicable conditions

Project/Equipment	AMC FMC Carrier v4.0.5		
Document	**AMC FMC Carrier v4.0.5** **Top**	Designer	T.Przywozki
		Drawn by	* XX/XX/XXXX
		Check.by	* -
		Last Mod.	M. Biernat 21/07/2026
		File	AMC_FMC_Carrier.SchDoc
		Print Date	05/08/2026 15:47:02 Sheet 1 of 29

Warsaw University of Technology *ISE*
Nowowiejska 15/19 00-665 Warsaw
Contact: t.przywozki@gmail.com

Size A3 Rev 1

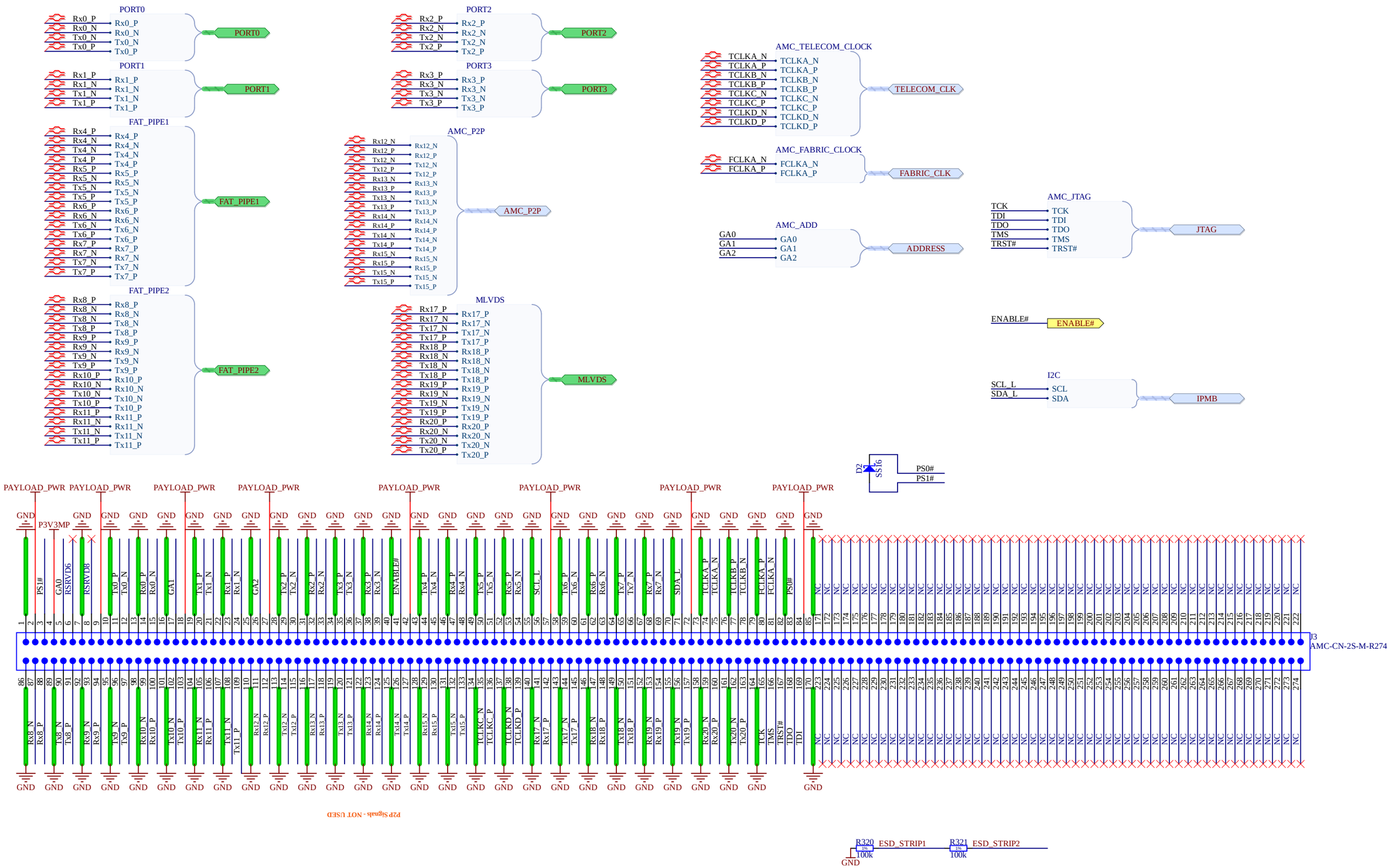

Copyright CNPEM 2013, WUT ISE 2020

This documentation describes Open Hardware and is licensed under CERN OHL v.1.1. You may redistribute and modify this documentaction under the terms of the CERN OHL v1.1. (http://ohwr.org/CERNOHL). This documentation is dristributed WITHOUT ANY EXPRESS OR IMPLIED WARRANTY, INCLUDING OF MERCHANTABLITY, SATISFACTORY QUALITY AND FITNESS FOR A PARTICULAR PURPOSE. Please see the CERN OHL v.1.1 for applicable conditions

- Dimensions are in MM, nominal values used
- Component height rule derived from AMC Base Specification.PDF, Page 62
- The two corners of outline near the edge-connector are approximated, see AMC Base Specification.PDF, Page 59
- Stackup is not specified in AMC Base Specification.PDF or implemented in this template.

Project/Equipment	AMC FMC Carrier v4.0.5		
Document	**AMC FMC Carrier v4.0.5** **AMC connector**	Designer	T.Przywozki
		Drawn by	*
		Check.by	*
		Last Mod.	F. Switakowski 21/07/2026
		File	AMC_Connector.SchDoc
		Print Date	05/08/2026 15:47:02 Sheet 2 of 29
	Warsaw University of Technology *Nowowiejska 15/19 00-665 Warsaw* **ISE**	Contact:	t.przywozki@gmail.com
		Size	A3
		Rev	1

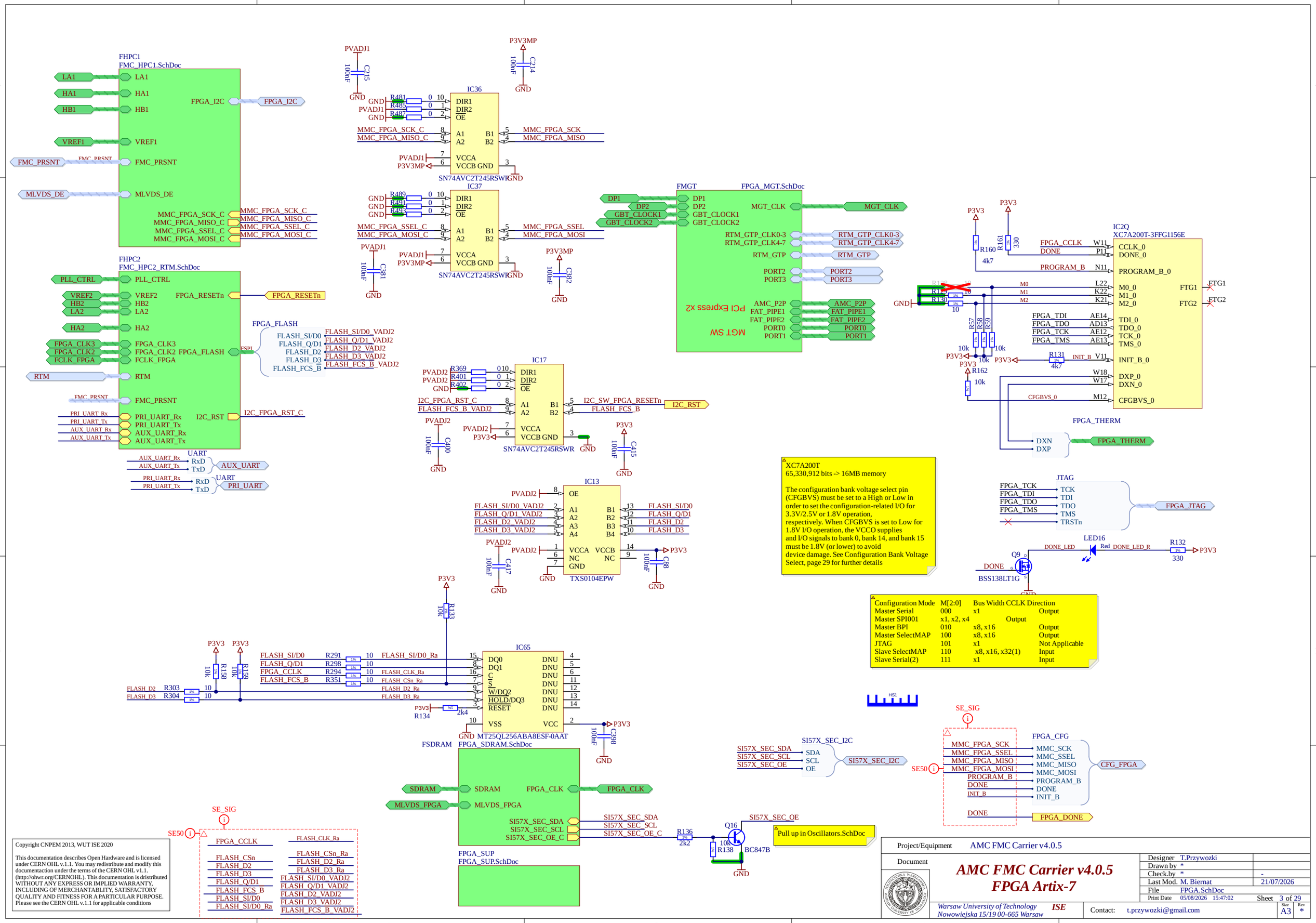

XC7A200T
65,330,912 bits -> 16MB memory

The configuration bank voltage select pin (CFGBVS) must be set to a High or Low in order to set the configuration-related I/O for 3.3V/2.5V or 1.8V operation, respectively. When CFGBVS is set to Low for 1.8V I/O operation, the VCCO supplies and I/O signals to bank 0, bank 14, and bank 15 must be 1.8V (or lower) to avoid device damage. See Configuration Bank Voltage Select, page 29 for further details

Configuration Mode	M[2:0]	Bus Width	CCLK Direction
Master Serial	000	x1	Output
Master SPI001	x1, x2, x4	Output	
Master BPI	010	x8, x16	Output
Master SelectMAP	100	x8, x16	Output
JTAG	101	x1	Not Applicable
Slave SelectMAP	110	x8, x16, x32(1)	Input
Slave Serial(2)	111	x1	Input

Copyright CNPEM 2013, WUT ISE 2020

This documentation describes Open Hardware and is licensed under CERN OHL v.1.1. You may redistribute and modify this documentaction under the terms of the CERN OHL v1.1. (http://ohwr.org/CERNOHL). This documentation is dristributed WITHOUT ANY EXPRESS OR IMPLIED WARRANTY, INCLUDING OF MERCHANTABLITY, SATISFACTORY QUALITY AND FITNESS FOR A PARTICULAR PURPOSE. Please see the CERN OHL v.1.1 for applicable conditions

Project/Equipment: AMC FMC Carrier v4.0.5

Document: **AMC FMC Carrier v4.0.5**
FPGA Artix-7

Designer	T.Przywozki	
Drawn by	*	
Check.by	*	-
Last Mod.	M. Biernat	21/07/2026
File	FPGA.SchDoc	
Print Date	05/08/2026 15:47:02	Sheet 3 of 29

Warsaw University of Technology
Nowowiejska 15/19 00-665 Warsaw
ISE
Contact: t.przywozki@gmail.com

Size A3 Rev *

VCCINT

1x680uF, 2x100uF, 28x4.7uF

42x0.47uF on PG.34

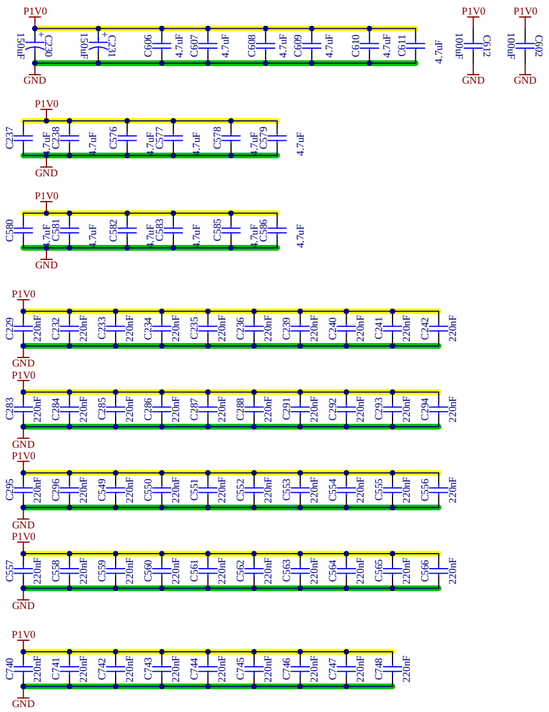

VCCAUX

3x47uF, 4x4.7uF, 7x0.47uF

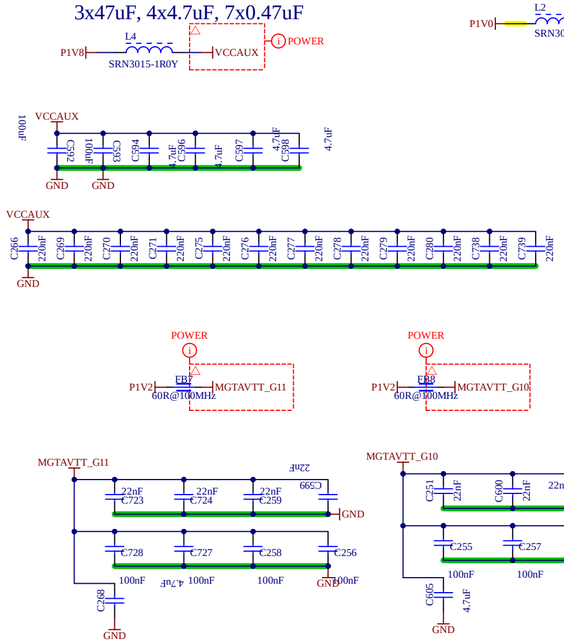

VCCBRAM

2x100uF, 4x4.7uF, 8x0.47uF

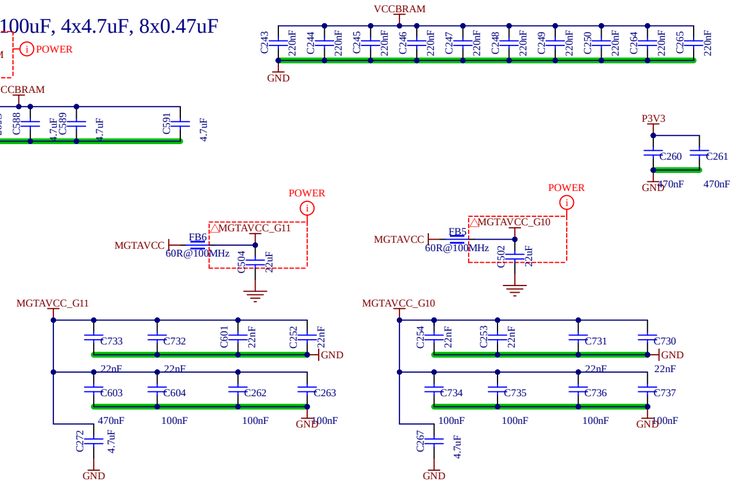

MGTAVCC	1V	2.3A		
MGTAVTT	1.2V	1.5A		
MGTVCCAUX	1.8V	0.5A		
VCCAUX	1.8V	1A		seq1
VCCAUX_IO	1.8/2V	01A		seq1
VCCBRAM	1V	1.8A		seq0
VCCINT	1V	6A		seq0
VCCO_1.2	1.2V	3.2A	seq2	
VCCO_1.35	1.35V	0.9A		seq2
VCCO_1.5	1.5V	0.9A	seq2	
VCCO_1.8	1.8V	0.9A	seq2	
VCCO_2.5	2.5V	0.9A	seq2	
VCCO_3.3	3.3V	0.9A	seq2	

power-on sequence is VCCINT, VCCBRAM, VCCAUX, and VCCO voltage difference between VCCO and VCCAUX must not exceed 2.625V for longer than TVCCO2VCCAUX
power-on sequence to achieve minimum current draw for the GTP transceivers is VCCINT, VMGTAVCC,
VMGTAVTT OR VMGTAVCC, VCCINT, VMGTAVTT. There is no recommended sequencing for VMGTVCCAUX. Both VMGTAVCC and VCCINT can be ramped simultaneously. The recommended power-off sequence is the reverse of the power-on sequence to
achieve minimum current draw.
When VMGTAVTT is powered before VMGTAVCC and VMGTAVTT– VMGTAVCC > 150 mV and VMGTAVCC < 0.7V, the
VMGTAVTT current draw can increase by 460 mA per transceiver during VMGTAVCC ramp up. The duration of the current
draw can be up to 0.3 x TMGTAVCC (ramp time from GND to 90% of VMGTAVCC). The reverse is true for power-down.
• When VMGTAVTT is powered before VCCINT and VMGTAVTT – VCCINT > 150 mV and VCCINT < 0.7V, the VMGTAVTT current
draw can increase by 50 mA per transceiver during VCCINT ramp up. The duration of the current draw can be up to
0.3 x TVCCINT (ramp time from GND to 90% of VCCINT). The reverse is true for power-down.

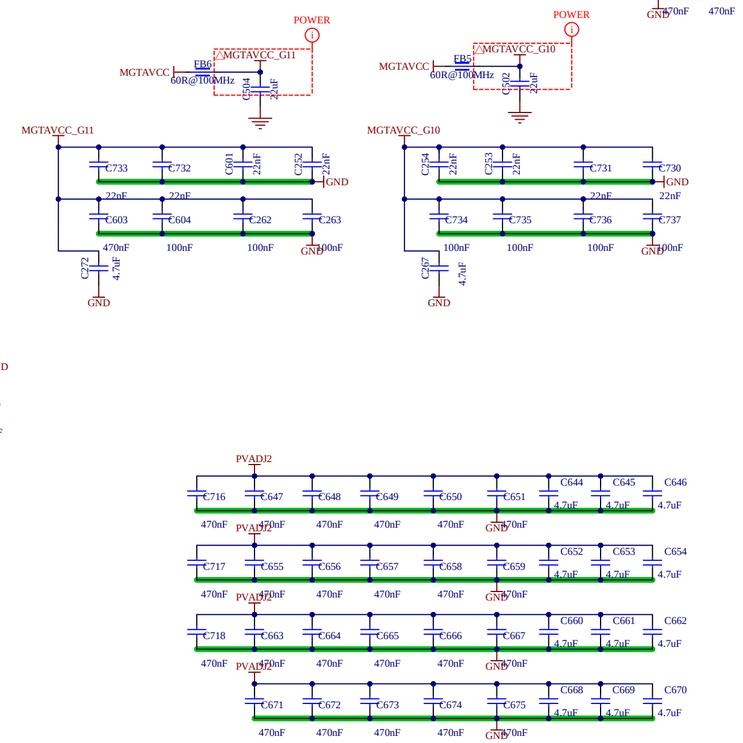

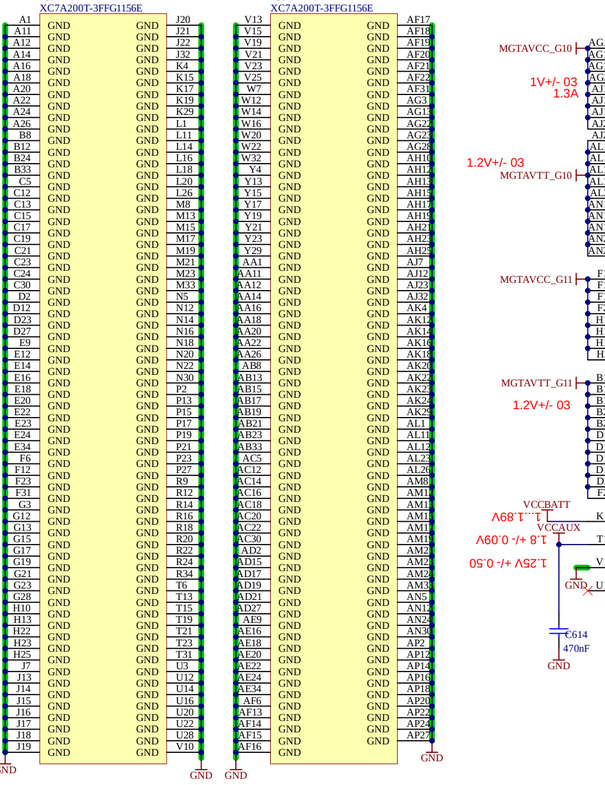

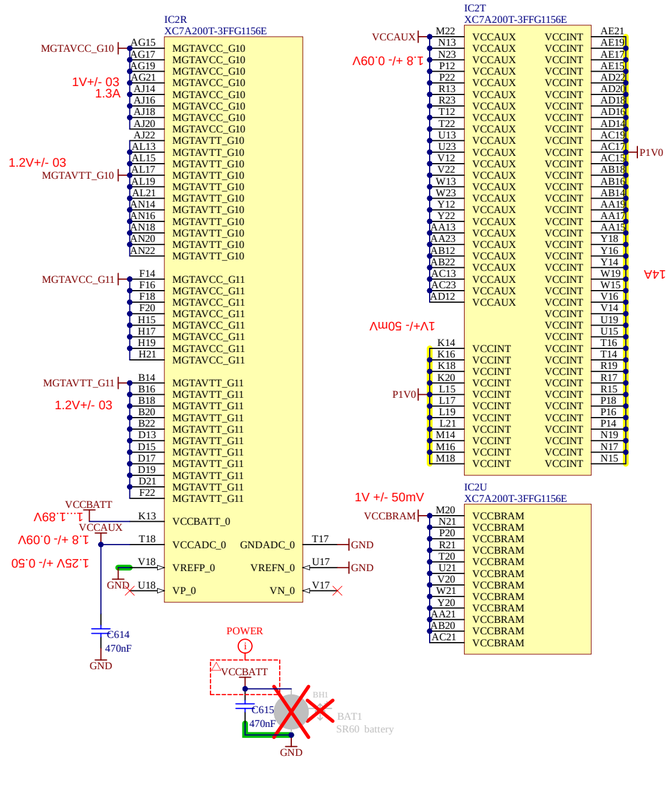

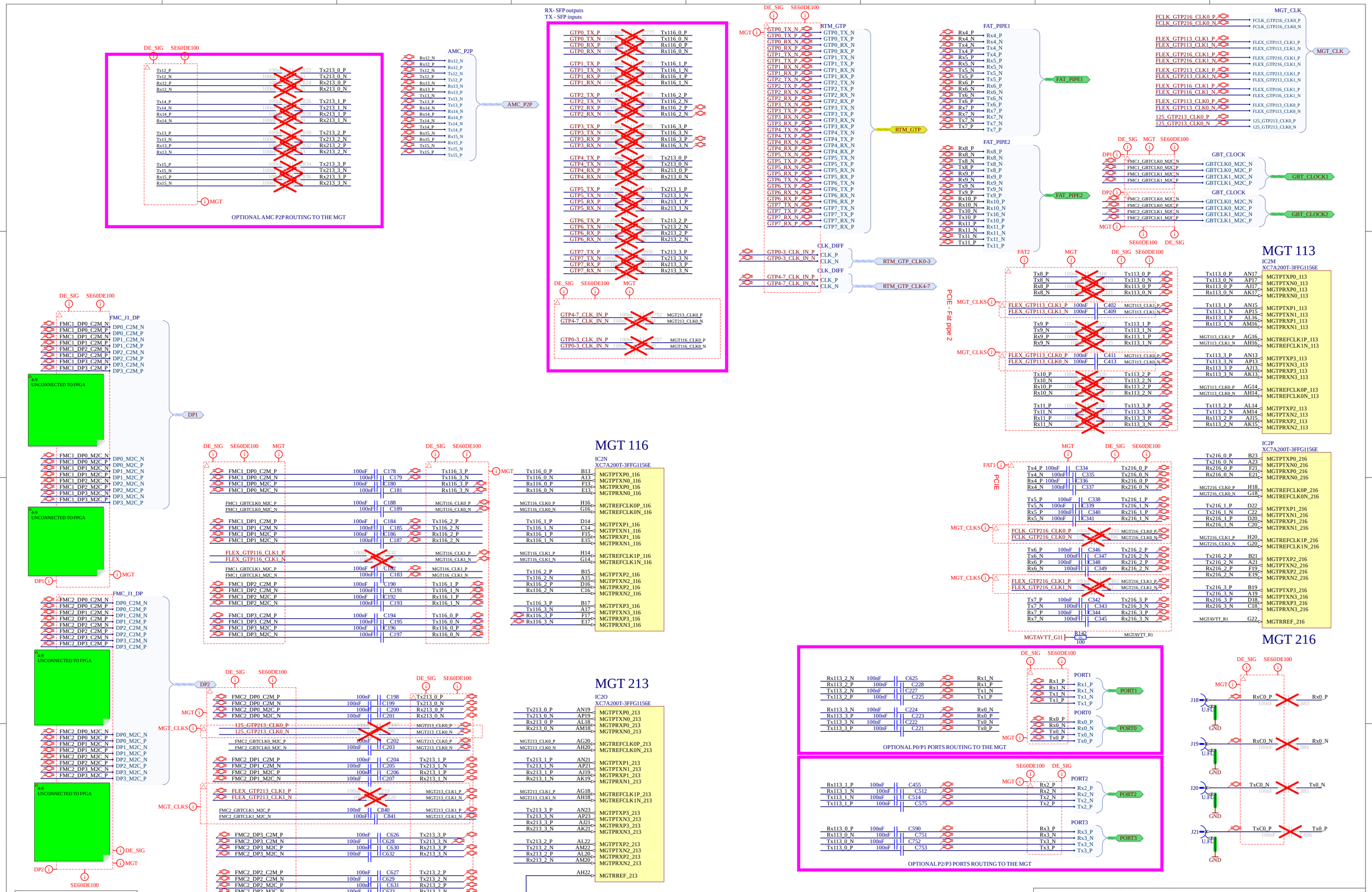

Copyright CNPEM 2013, WUT ISE 2020

This documentation describes Open Hardware and is licensed under CERN OHL v.1.1. You may redistribute and modify this documentation under the terms of the CERN OHL v1.1. (http://ohwr.org/CERNOHL). This documentation is dristributed WITHOUT ANY EXPRESS OR IMPLIED WARRANTY, INCLUDING OF MERCHANTABLITY, SATISFACTORY QUALITY AND FITNESS FOR A PARTICULAR PURPOSE. Please see the CERN OHL v.1.1 for applicable conditions

Project/Equipment	AMC FMC Carrier v4.0.5
Document	**AMC FMC Carrier v4.0.5 FPGA GTP banks**
Designer	T.Przywozki
Drawn by	*
Check.by	*
Last Mod.	M. Biernat 21/07/2026
File	FPGA_MGT.SchDoc
Print Date	05/08/2026 15:47:03
Sheet	5 of 29
Size	A2
Rev	1

Warsaw University of Technology ISE
Nowowiejska 15/19 00-665 Warsaw
Contact: t.przywozki@gmail.com

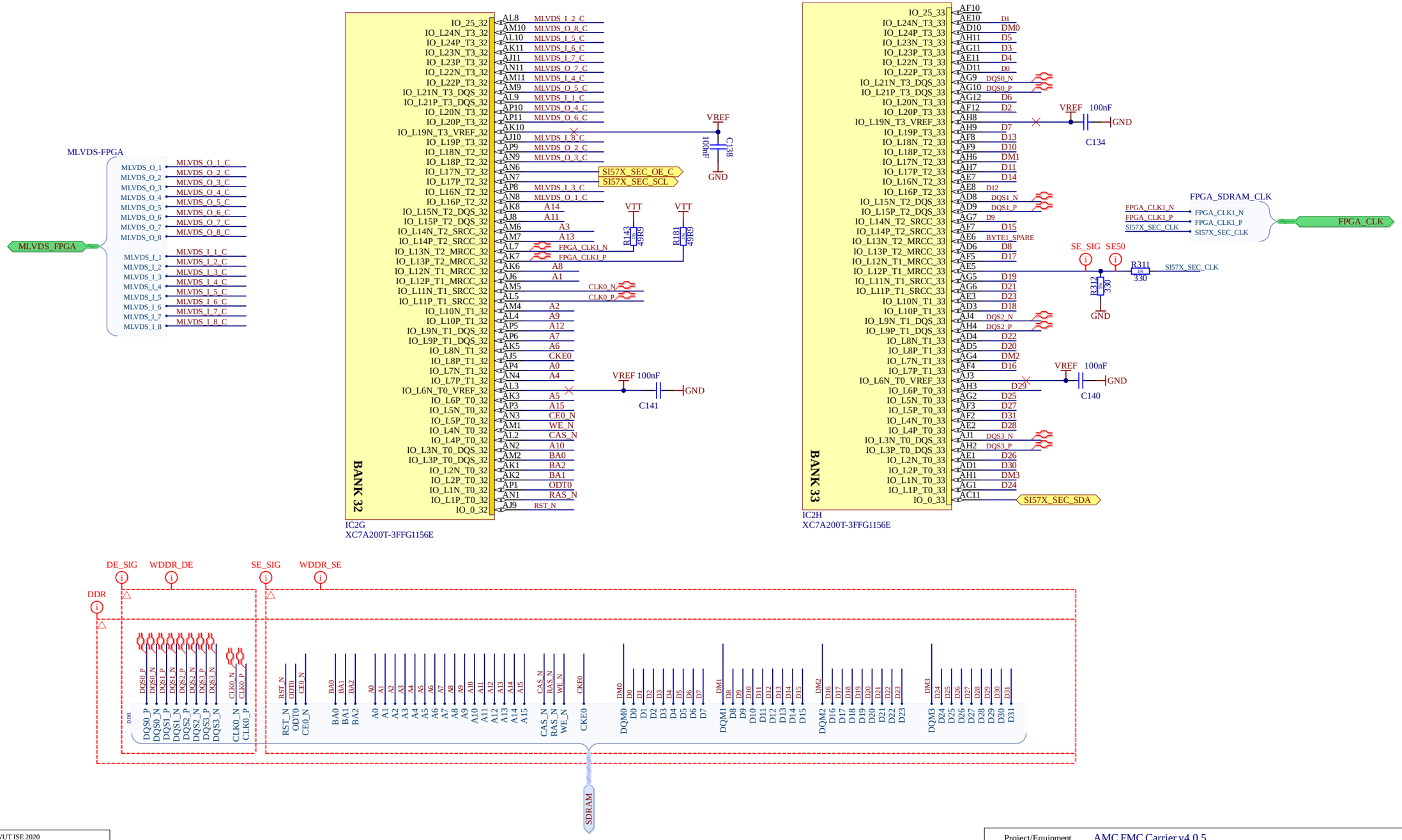

Copyright CNPEM 2013, WUT ISE 2020

This documentation describes Open Hardware and is licensed under CERN OHL v.1.1. You may redistribute and modify this documentaction under the terms of the CERN OHL v1.1. (http://ohwr.org/CERNOHL). This documentation is dristributed WITHOUT ANY EXPRESS OR IMPLIED WARRANTY, INCLUDING OF MERCHANTABLITY, SATISFACTORY QUALITY AND FITNESS FOR A PARTICULAR PURPOSE. Please see the CERN OHL v.1.1 for applicable conditions

Project/Equipment: AMC FMC Carrier v4.0.5

Document

AMC FMC Carrier v4.0.5
FPGA banks 32 & 33 (SDRAM)

Designer	T. Przywozki	
Drawn by		
Check.by		-
Last Mod.	F. Switakowski	21/07/2026
File	FPGA_SDRAM.SchDoc	
Print Date	05/08/2026 15:47:03	Sheet 6 of 29

Warsaw University of Technology
Nowowiejska 15/19 00-665 Warsaw
ISE
Contact: t.przywozki@gmail.com

Size A3 Rev 1

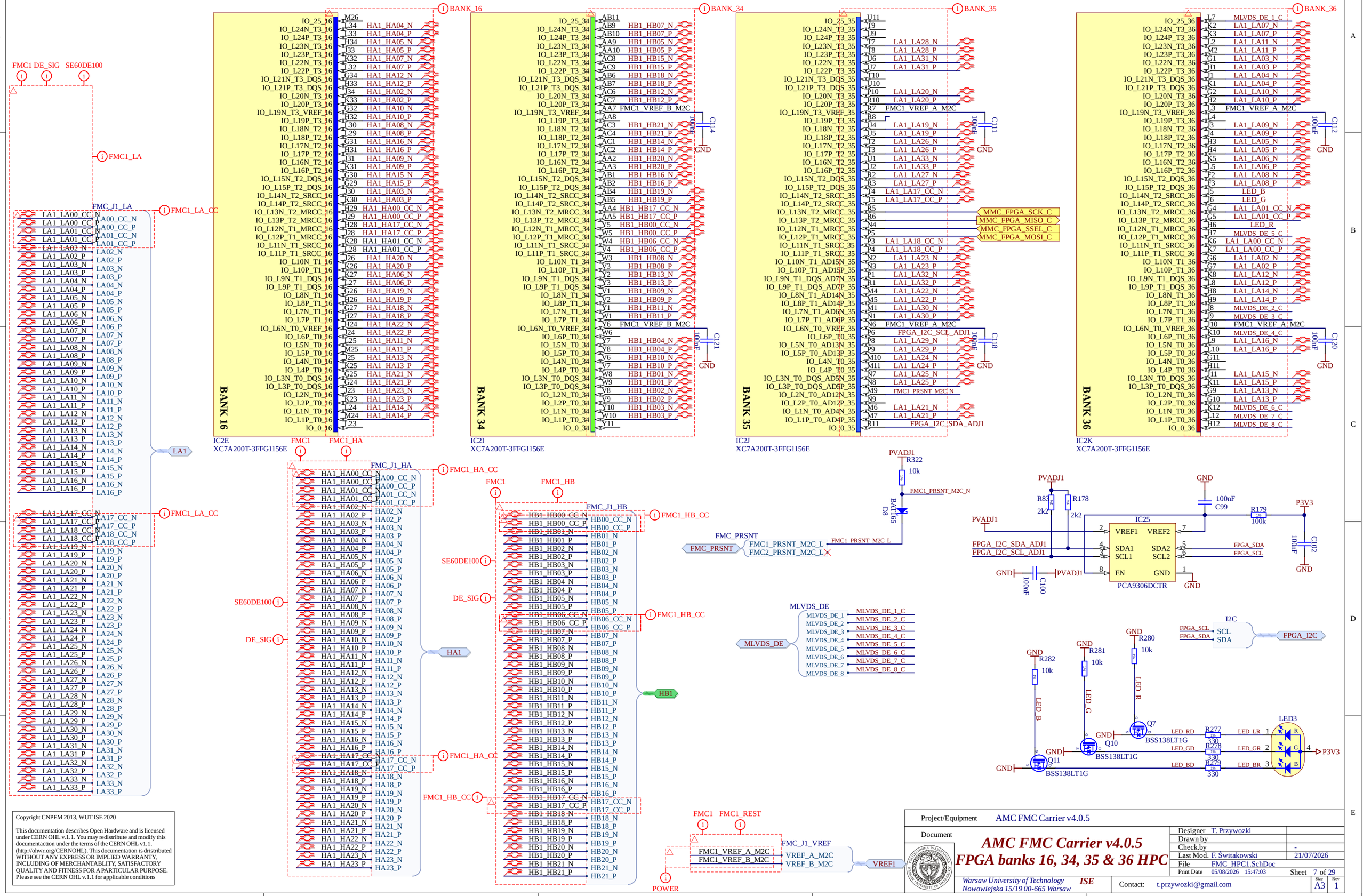

Copyright CNPEM 2013, WUT ISE 2020

This documentation describes Open Hardware and is licensed under CERN OHL v.1.1. You may redistribute and modify this documentaction under the terms of the CERN OHL v1.1. (http://ohwr.org/CERNOHL). This documentation is distributed WITHOUT ANY EXPRESS OR IMPLIED WARRANTY, INCLUDING OF MERCHANTABLITY, SATISFACTORY QUALITY AND FITNESS FOR A PARTICULAR PURPOSE. Please see the CERN OHL v.1.1 for applicable conditions

Project/Equipment	AMC FMC Carrier v4.0.5
Document	**AMC FMC Carrier v4.0.5** **FPGA banks 16, 34, 35 & 36 HPC**
Designer	T. Przywozki
Drawn by	
Check.by	-
Last Mod.	F. Switakowski 21/07/2026
File	FMC_HPC1.SchDoc
Print Date	05/08/2026 15:47:03 Sheet 7 of 29

Warsaw University of Technology
Nowowiejska 15/19 00-665 Warsaw
ISE
Contact: t.przywozki@gmail.com

Size A3 Rev 1

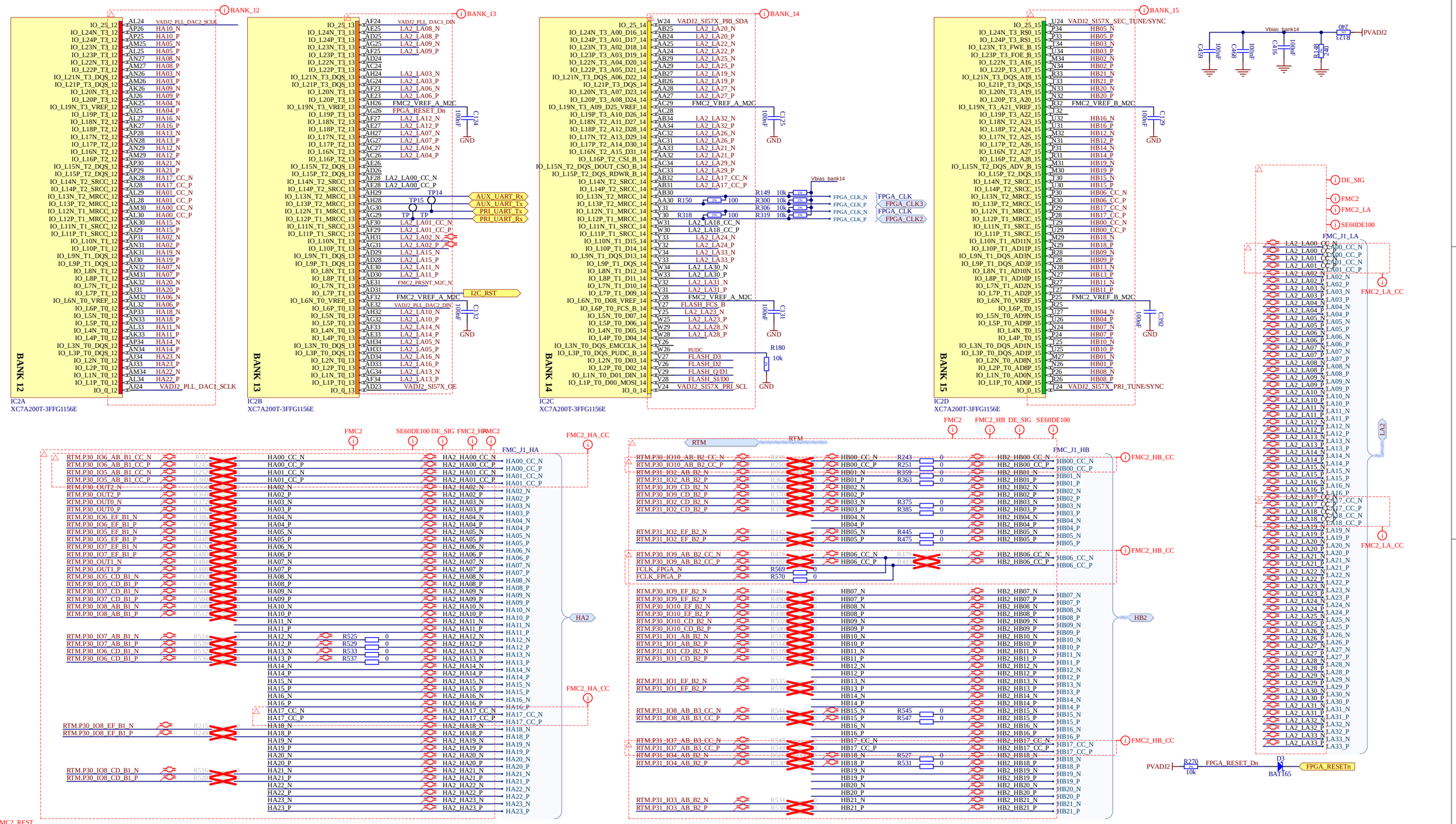

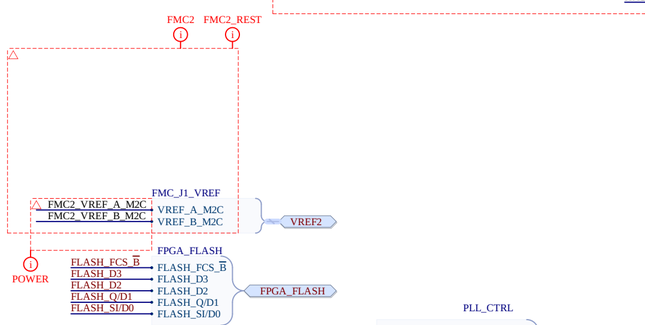

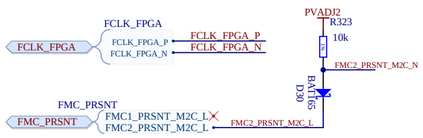

Copyright CNPEM 2013, WUT ISE 2020

This documentation describes Open Hardware and is licensed under CERN OHL v.1.1. You may redistribute and modify this documentation under the terms of the CERN OHL v.1.1. (http://ohwr.org/CERNOHL). This documentation is dristributed WITHOUT ANY EXPRESS OR IMPLIED WARRANTY, INCLUDING OF MERCHANTABLITY, SATISFACTORY QUALITY AND FITNESS FOR A PARTICULAR PURPOSE. Please see the CERN OHL v.1.1 for applicable conditions

Project/Equipment	AMC FMC Carrier v4.0.5		
Document	**AMC FMC Carrier v4.0.5 FPGA banks HPC2 / RTM**	Designer	T. Przywozki
		Drawn by	
		Check.by	-
		Last Mod.	M. Biernat 04/08/2026
		File	FMC_HPC2_RTM.SchDoc
		Print Date	05/08/2026 15:47:03 Sheet 8 of 29
Warsaw University of Technology ISE Nowowiejska 15/19 00-665 Warsaw	Contact: t.przywozki@gmail.com	Size A2	Rev 1

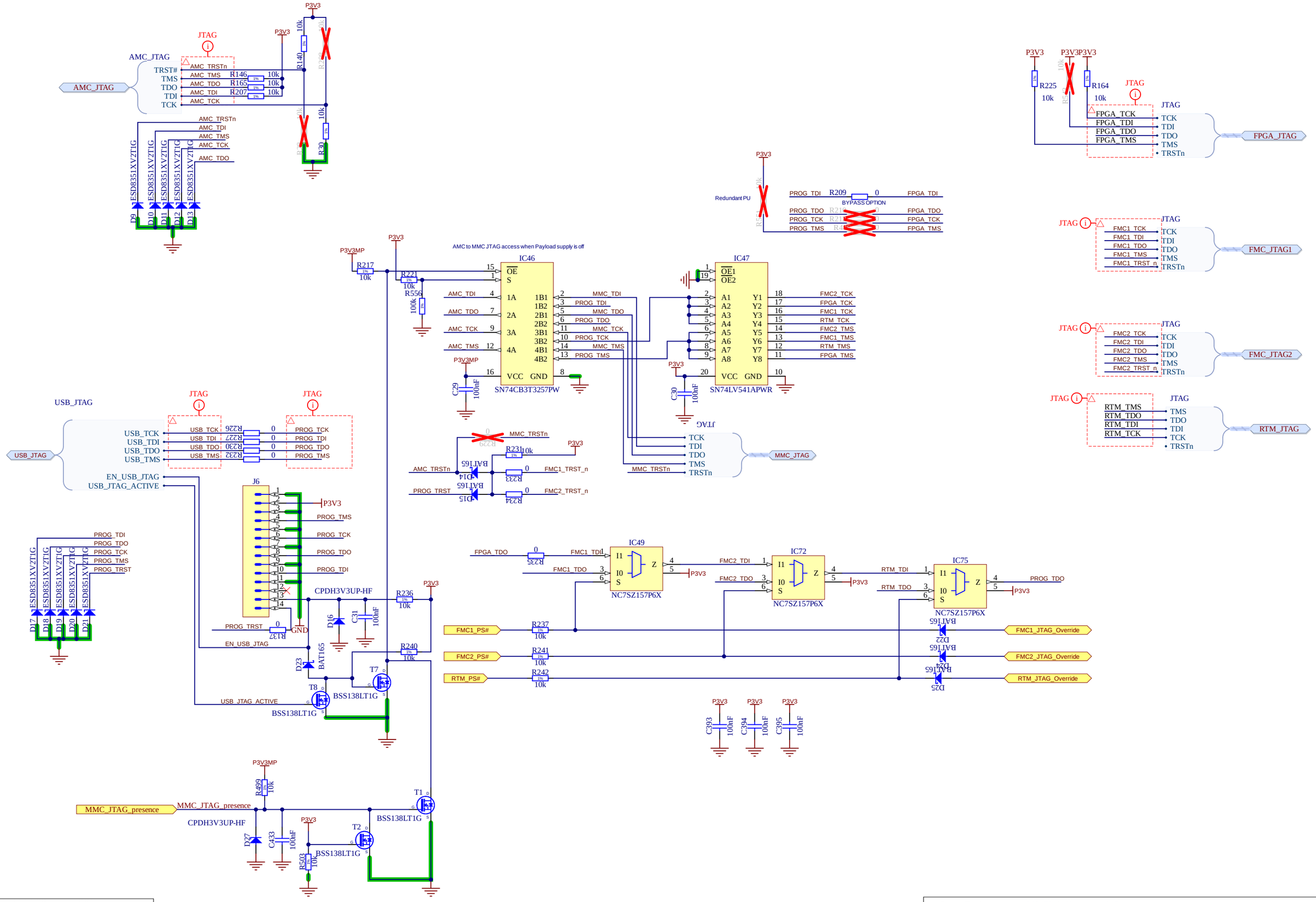

Copyright CNPEM 2013, WUT ISE 2020

This documentation describes Open Hardware and is licensed under CERN OHL v.1.1. You may redistribute and modify this documentation under the terms of the CERN OHL v1.1. (http://ohwr.org/CERNOHL). This documentation is dristributed WITHOUT ANY EXPRESS OR IMPLIED WARRANTY, INCLUDING OF MERCHANTABLITY, SATISFACTORY QUALITY AND FITNESS FOR A PARTICULAR PURPOSE. Please see the CERN OHL v.1.1 for applicable conditions

Project/Equipment	AMC FMC Carrier v4.0.5		
Document	**AMC FMC Carrier v4.0.5 JTAG Chain**	Designer	T. Przywozki
		Drawn by	
		Check.by	-
		Last Mod.	F. Switakowski 21/07/2026
		File	JTAG_Configuration.SchDoc
		Print Date	05/08/2026 15:47:03 Sheet 9 of 29
Warsaw University of Technology Nowowiejska 15/19 00-665 Warsaw	ISE	Contact:	t.przywozki@gmail.com
		Size	A3
		Rev	1

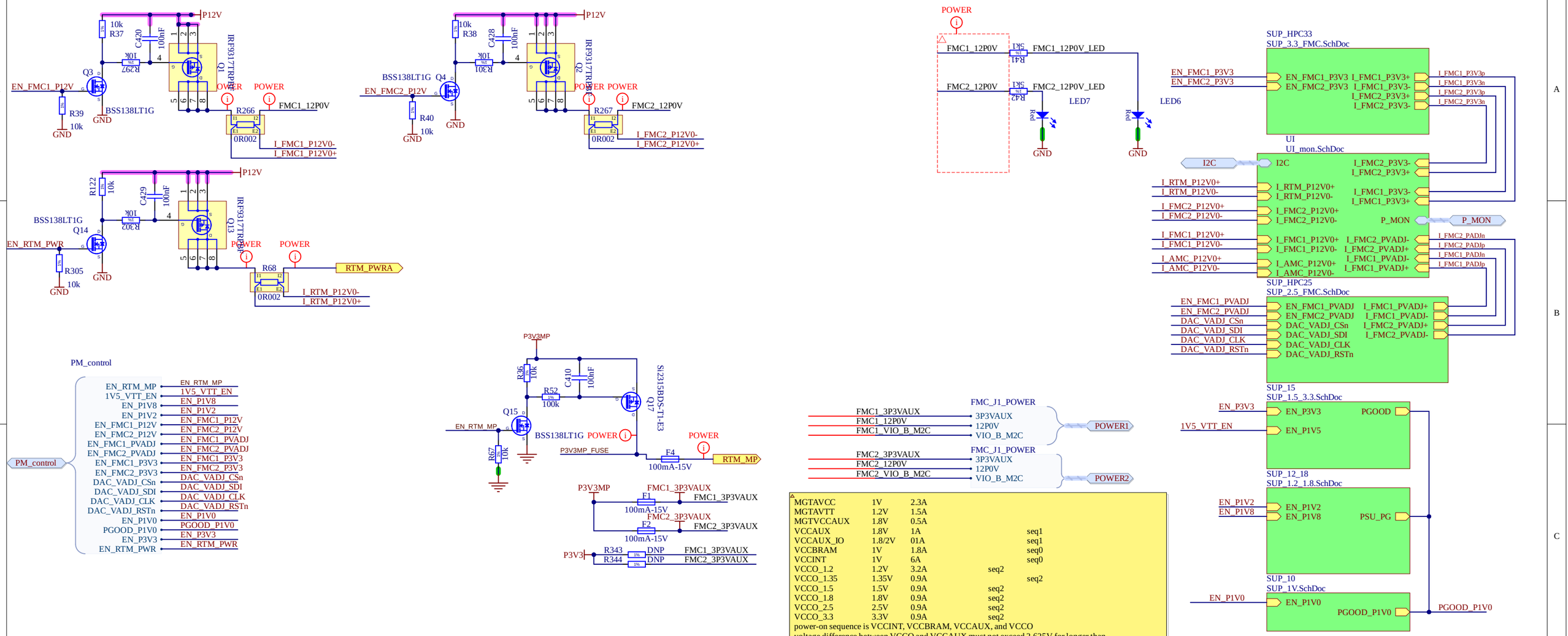

MGTAVCC	1V	2.3A		
MGTAVTT	1.2V	1.5A		
MGTVCCAUX	1.8V	0.5A		
VCCAUX	1.8V	1A		seq1
VCCAUX_IO	1.8/2V	01A		seq1
VCCBRAM	1V	1.8A		seq0
VCCINT	1V	6A		seq0
VCCO_1.2	1.2V	3.2A	seq2	
VCCO_1.35	1.35V	0.9A		seq2
VCCO_1.5	1.5V	0.9A	seq2	
VCCO_1.8	1.8V	0.9A	seq2	
VCCO_2.5	2.5V	0.9A	seq2	
VCCO_3.3	3.3V	0.9A	seq2	

power-on sequence is VCCINT, VCCBRAM, VCCAUX, and VCCO
voltage difference between VCCO and VCCAUX must not exceed 2.625V for longer than TVCCO2VCCAUX
power-on sequence to achieve minimum current draw for the GTP transceivers is VCCINT, VMGTAVCC, VMGTAVTT OR VMGTAVCC, VCCINT, VMGTAVTT. There is no recommended sequencing for VMGTVCCAUX. Both VMGTAVCC and
VCCINT can be ramped simultaneously. The recommended power-off sequence is the reverse of the power-on sequence to
achieve minimum current draw.
When VMGTAVTT is powered before VMGTAVCC and VMGTAVTT – VMGTAVCC > 150 mV and VMGTAVCC < 0.7V, the
VMGTAVTT current draw can increase by 460 mA per transceiver during VMGTAVCC ramp up. The duration of the current
draw can be up to 0.3 x TMGTAVCC (ramp time from GND to 90% of VMGTAVCC). The reverse is true for power-down.
• When VMGTAVTT is powered before VCCINT and VMGTAVTT – VCCINT > 150 mV and VCCINT < 0.7V, the VMGTAVTT current
draw can increase by 50 mA per transceiver during VCCINT ramp up. The duration of the current draw can be up to
0.3 x TVCCINT (ramp time from GND to 90% of VCCINT). The reverse is true for power-down.

Copyright CNPEM 2013, WUT ISE 2020

This documentation describes Open Hardware and is licensed under CERN OHL v.1.1. You may redistribute and modify this documentaction under the terms of the CERN OHL v1.1. (http://ohwr.org/CERNOHL). This documentation is dristributed WITHOUT ANY EXPRESS OR IMPLIED WARRANTY, INCLUDING OF MERCHANTABLITY, SATISFACTORY QUALITY AND FITNESS FOR A PARTICULAR PURPOSE. Please see the CERN OHL v.1.1 for applicable conditions

Project/Equipment: AMC FMC Carrier v4.0.5

Document

AMC FMC Carrier v4.0.5
Power entry & management

Designer	T. Przywozki	
Drawn by		
Check.by		-
Last Mod.	F. Świtakowski	21/07/2026
File	POWER_Management.SchDoc	
Print Date	05/08/2026 15:47:03	Sheet 10 of 29

Warsaw University of Technology
Nowowiejska 15/19 00-665 Warsaw
ISE
Contact: t.przywozki@gmail.com

Size A3 Rev 1

Compatible parts:
TPSM843521 - 5A
TPSM843321 - 3A
TPSM84538 - 5A,28V in
TPSM84338 - 3A, 28V in

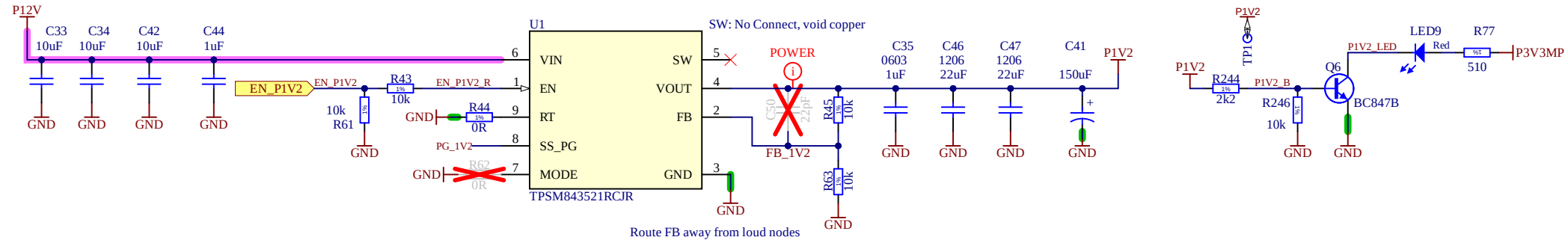

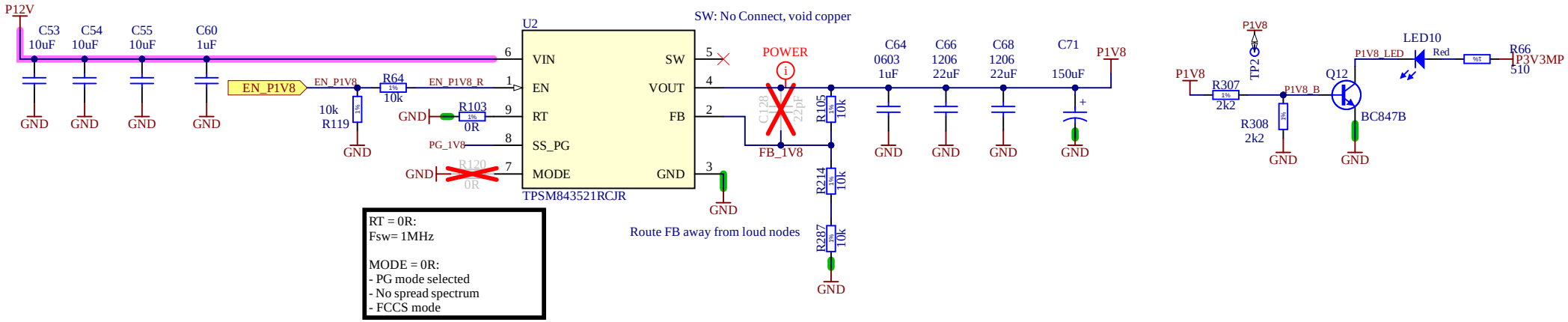

RT = 0R:
Fsw= 1MHz

MODE = 0R:
- PG mode selected
- No spread spectrum
- FCCS mode

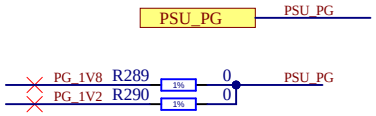

Copyright CNPEM 2013, WUT ISE 2020

This documentation describes Open Hardware and is licensed under CERN OHL v.1.1. You may redistribute and modify this documentaction under the terms of the CERN OHL v1.1. (http://ohwr.org/CERNOHL). This documentation is dristributed WITHOUT ANY EXPRESS OR IMPLIED WARRANTY, INCLUDING OF MERCHANTABLITY, SATISFACTORY QUALITY AND FITNESS FOR A PARTICULAR PURPOSE. Please see the CERN OHL v.1.1 for applicable conditions

Project/Equipment	AMC FMC Carrier v4.0.5		
Document	**AMC FMC Carrier v4.0.5 Power P1V2 & P1V8**	Designer	T. Przywozki
		Drawn by	XX/XX/XXXX
		Check.by	-
		Last Mod.	F. Świtakowski 21/07/2026
		File	SUP_1.2_1.8.SchDoc
		Print Date	05/08/2026 15:47:03
		Sheet	11 of 29

Warsaw University of Technology
Nowowiejska 15/19 00-665 Warsaw
ISE
Contact: t.przywozki@gmail.com

Size A4 Rev 1

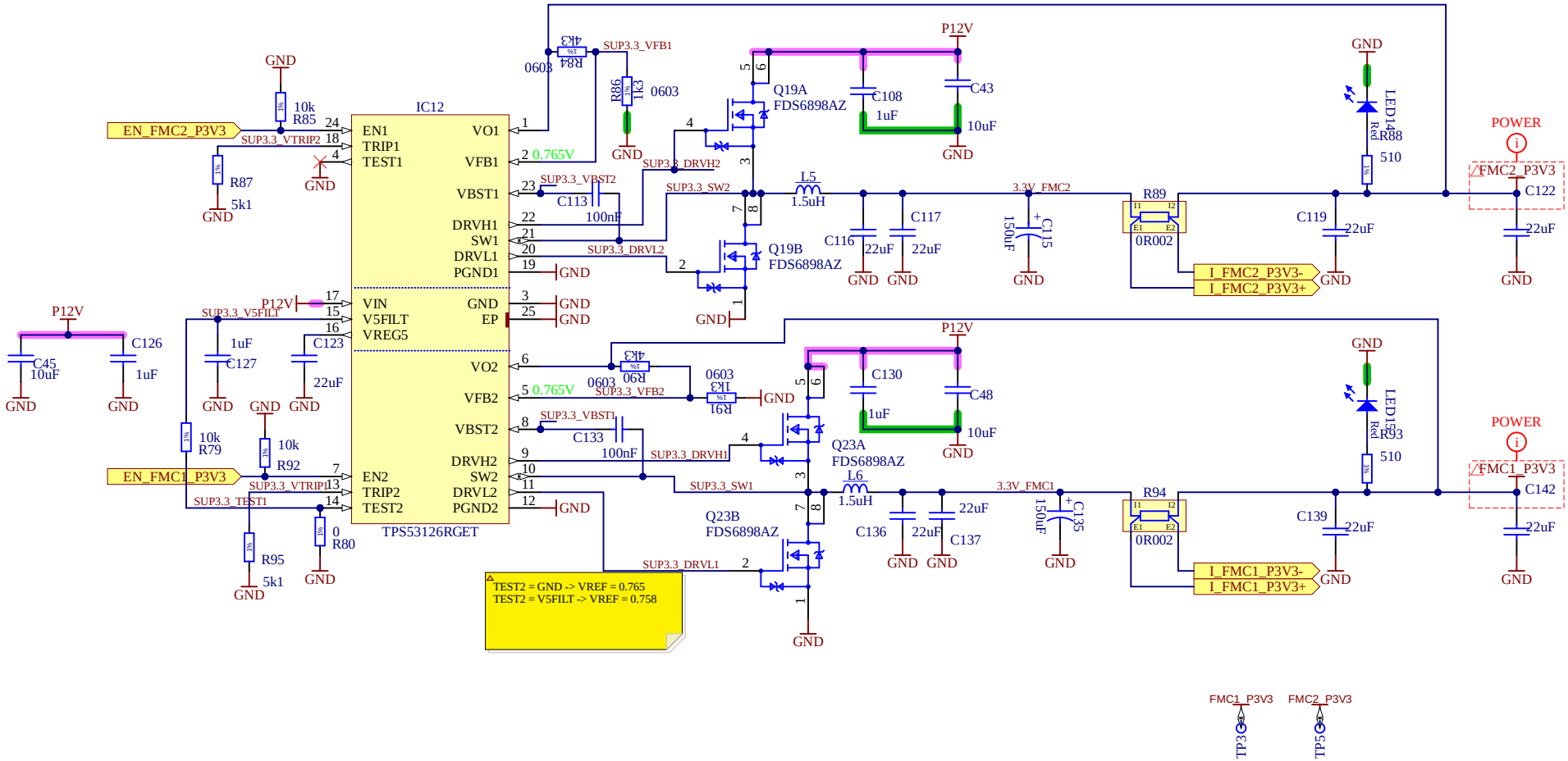

Copyright CNPEM 2013, WUT ISE 2020

This documentation describes Open Hardware and is licensed under CERN OHL v.1.1. You may redistribute and modify this documentaction under the terms of the CERN OHL v1.1. (http://ohwr.org/CERNOHL). This documentation is dristributed WITHOUT ANY EXPRESS OR IMPLIED WARRANTY, INCLUDING OF MERCHANTABLITY, SATISFACTORY QUALITY AND FITNESS FOR A PARTICULAR PURPOSE. Please see the CERN OHL v.1.1 for applicable conditions

Project/Equipment: AMC FMC Carrier v4.0.5

Document

AMC FMC Carrier v4.0.5
Power FMCs P3V3

Designer	T. Przywozki	
Drawn by		XX/XX/XXXX
Check.by		-
Last Mod.	F. Świtakowski	21/07/2026
File	SUP_3.3_FMC.SchDoc	
Print Date	05/08/2026 15:47:03	Sheet 12 of 29

Warsaw University of Technology
Nowowiejska 15/19 00-665 Warsaw
ISE
Contact: t.przywozki@gmail.com

Size A4 Rev 1

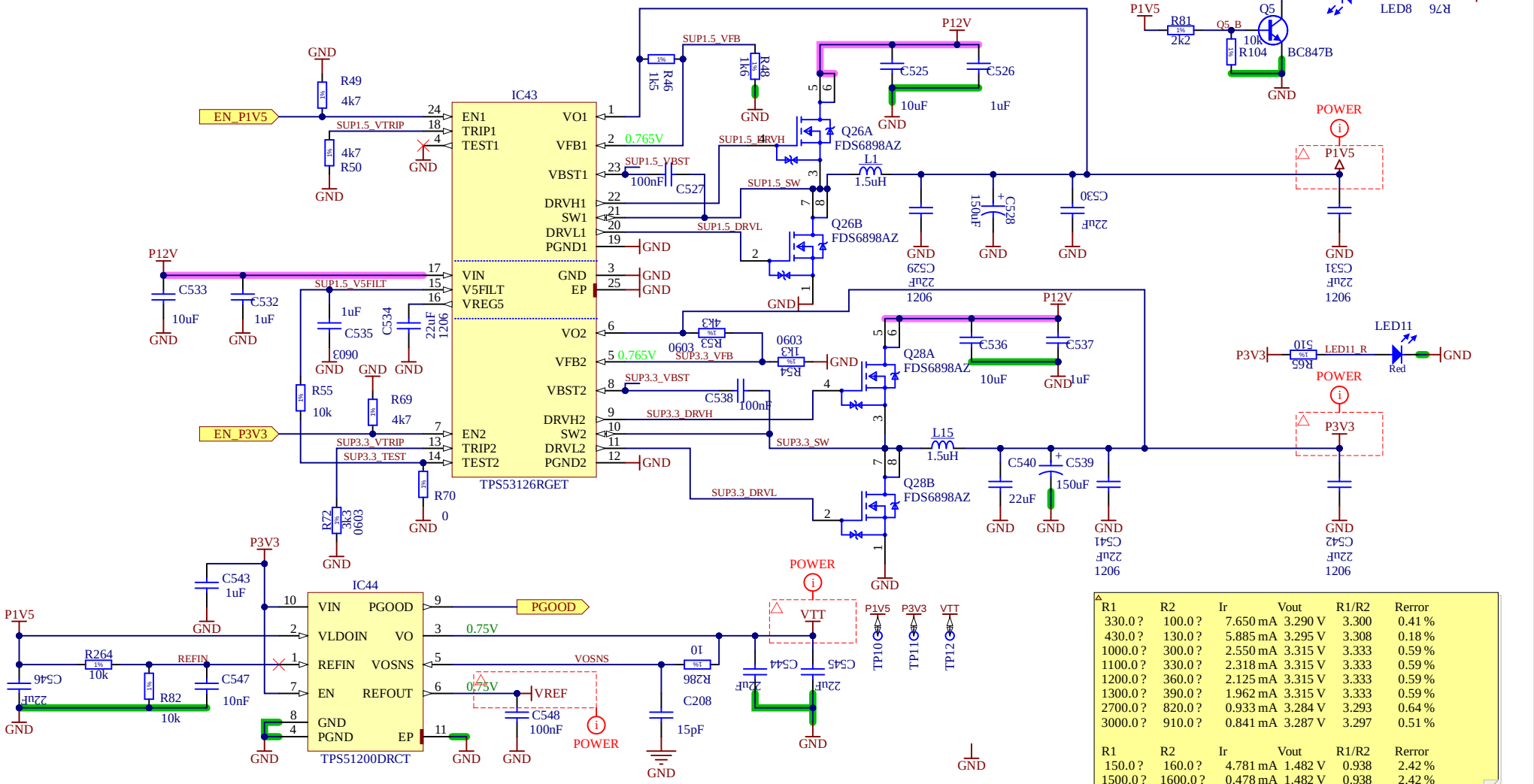

R1	R2	Ir	Vout	R1/R2	Rerror
330.0 ?	100.0 ?	7.650 mA	3.290 V	3.300	0.41 %
430.0 ?	130.0 ?	5.885 mA	3.295 V	3.308	0.18 %
1000.0 ?	300.0 ?	2.550 mA	3.315 V	3.333	0.59 %
1100.0 ?	330.0 ?	2.318 mA	3.315 V	3.333	0.59 %
1200.0 ?	360.0 ?	2.125 mA	3.315 V	3.333	0.59 %
1300.0 ?	390.0 ?	1.962 mA	3.315 V	3.333	0.59 %
2700.0 ?	820.0 ?	0.933 mA	3.284 V	3.293	0.64 %
3000.0 ?	910.0 ?	0.841 mA	3.287 V	3.297	0.51 %

R1	R2	Ir	Vout	R1/R2	Rerror
150.0 ?	160.0 ?	4.781 mA	1.482 V	0.938	2.42 %
1500.0 ?	1600.0 ?	0.478 mA	1.482 V	0.938	2.42 %

Copyright CNPEM 2013, WUT ISE 2020

This documentation describes Open Hardware and is licensed under CERN OHL v.1.1. You may redistribute and modify this documentaction under the terms of the CERN OHL v1.1. (http://ohwr.org/CERNOHL). This documentation is dristributed WITHOUT ANY EXPRESS OR IMPLIED WARRANTY, INCLUDING OF MERCHANTABLITY, SATISFACTORY QUALITY AND FITNESS FOR A PARTICULAR PURPOSE. Please see the CERN OHL v.1.1 for applicable conditions

Project/Equipment: AMC FMC Carrier v4.0.5

Document

AMC FMC Carrier v4.0.5
Power P1V5, P3V3 & VTT

Designer	T. Przywozki
Drawn by	XX/XX/XXXX
Check.by	-
Last Mod.	F. Świtakowski 21/07/2026
File	SUP_1.5_3.3.SchDoc
Print Date	05/08/2026 15:47:04
Sheet	13 of 29

Warsaw University of Technology
Nowowiejska 15/19 00-665 Warsaw
ISE
Contact: t.przywozki@gmail.com

Size A4 Rev 1

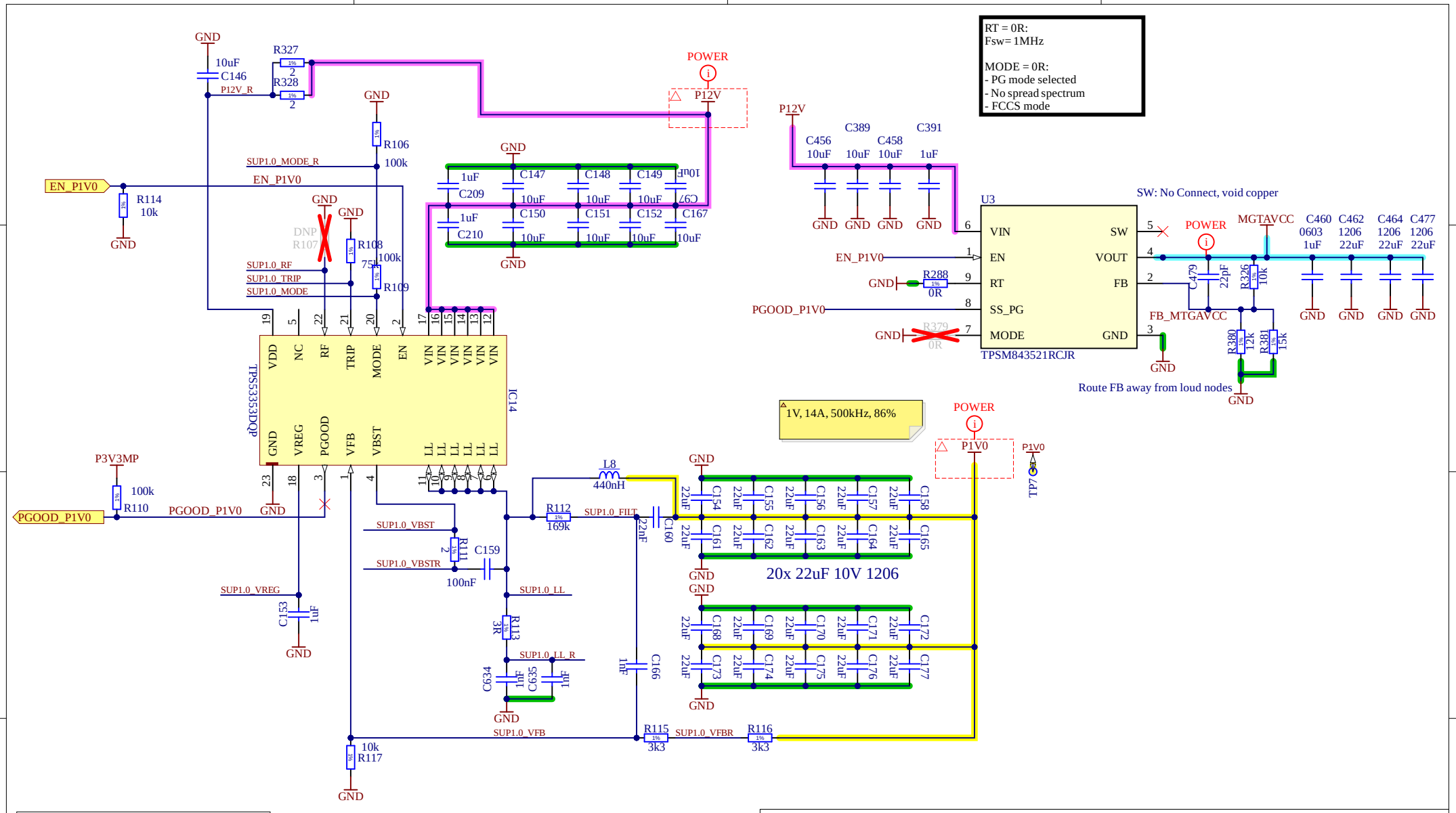

Copyright CNPEM 2013, WUT ISE 2020

This documentation describes Open Hardware and is licensed under CERN OHL v.1.1. You may redistribute and modify this documentaction under the terms of the CERN OHL v1.1. (http://ohwr.org/CERNOHL). This documentation is distributed WITHOUT ANY EXPRESS OR IMPLIED WARRANTY, INCLUDING OF MERCHANTABLITY, SATISFACTORY QUALITY AND FITNESS FOR A PARTICULAR PURPOSE. Please see the CERN OHL v.1.1 for applicable conditions

Project/Equipment	AMC FMC Carrier v4.0.5		
Document	**AMC FMC Carrier v4.0.5 Power P1V0**	Designer	T. Przywozki
		Drawn by	XX/XX/XXXX
		Check.by	-
		Last Mod.	F. Świtakowski 21/07/2026
		File	SUP_1V.SchDoc
		Print Date	05/08/2026 15:47:04
		Sheet	14 of 29

Warsaw University of Technology
Nowowiejska 15/19 00-665 Warsaw
ISE
Contact: t.przywozki@gmail.com

Size A4 Rev 1

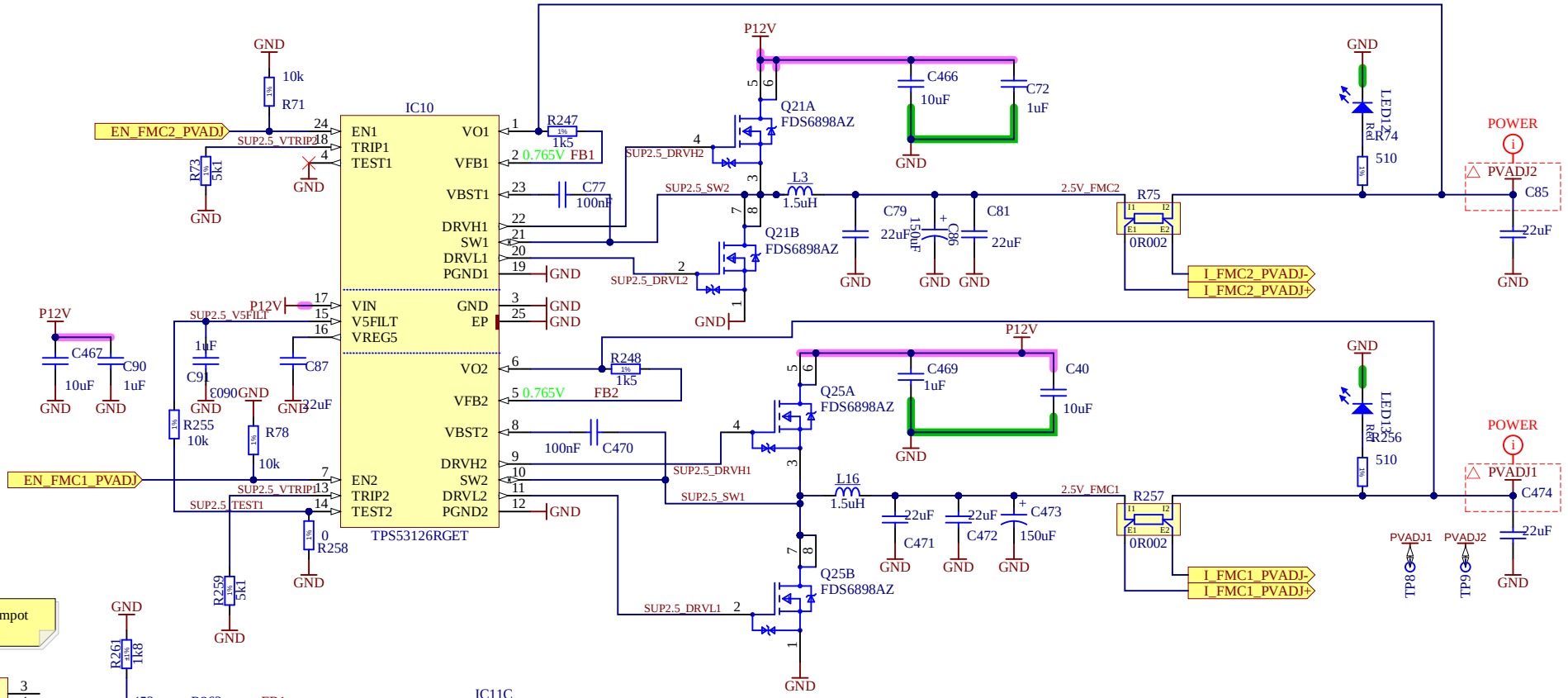

R1	R2	Ir	Vout	R1/R2	Rerror
150.0 ?	110.0 ?	6.955 mA	1.808 V	1.364	0.79 %
270.0 ?	200.0 ?	3.825 mA	1.798 V	1.350	0.22 %
300.0 ?	220.0 ?	3.477 mA	1.808 V	1.364	0.79 %
1100.0 ?	820.0 ?	0.933 mA	1.791 V	1.341	0.85 %
1500.0 ?	1100.0 ?	0.695 mA	1.808 V	1.364	0.79 %
2700.0 ?	2000.0 ?	0.383 mA	1.798 V	1.350	0.22 %
3000.0 ?	2200.0 ?	0.348 mA	1.808 V	1.364	0.79 %

R1	R2	Ir	Vout	R1/R2	Rerror
1100.0 ?	100.0 ?	7.650 mA	9.180 V	11.000	2.19 %
1200.0 ?	110.0 ?	6.955 mA	9.110 V	10.909	1.34 %
1300.0 ?	120.0 ?	6.375 mA	9.053 V	10.833	0.64 %
1600.0 ?	150.0 ?	5.100 mA	8.925 V	10.667	0.91 %
1800.0 ?	160.0 ?	4.781 mA	9.371 V	11.250	4.51 %
2000.0 ?	180.0 ?	4.250 mA	9.265 V	11.111	3.22 %
2200.0 ?	200.0 ?	3.825 mA	9.180 V	11.000	2.19 %
2400.0 ?	220.0 ?	3.477 mA	9.110 V	10.909	1.34 %
2700.0 ?	240.0 ?	3.188 mA	9.371 V	11.250	4.51 %
3000.0 ?	270.0 ?	2.833 mA	9.265 V	11.111	3.22 %
3300.0 ?	300.0 ?	2.550 mA	9.180 V	11.000	2.19 %

Copyright CNPEM 2013, WUT ISE 2020

This documentation describes Open Hardware and is licensed under CERN OHL v.1.1. You may redistribute and modify this documentaction under the terms of the CERN OHL v1.1. (http://ohwr.org/CERNOHL). This documentation is dristributed WITHOUT ANY EXPRESS OR IMPLIED WARRANTY, INCLUDING OF MERCHANTABLITY, SATISFACTORY QUALITY AND FITNESS FOR A PARTICULAR PURPOSE. Please see the CERN OHL v.1.1 for applicable conditions

Project/Equipment: AMC FMC Carrier v4.0.5

Document

AMC FMC Carrier v4.0.5
Power FMCs PVADJ

Warsaw University of Technology
Nowowiejska 15/19 00-665 Warsaw
ISE

Contact: t.przywozki@gmail.com

Designer	T. Przywozki
Drawn by	XX/XX/XXXX
Check.by	-
Last Mod.	F. Świtakowski 21/07/2026
File	SUP_2.5_FMC.SchDoc
Print Date	05/08/2026 15:47:04
Sheet	15 of 29
Size	A4
Rev	1

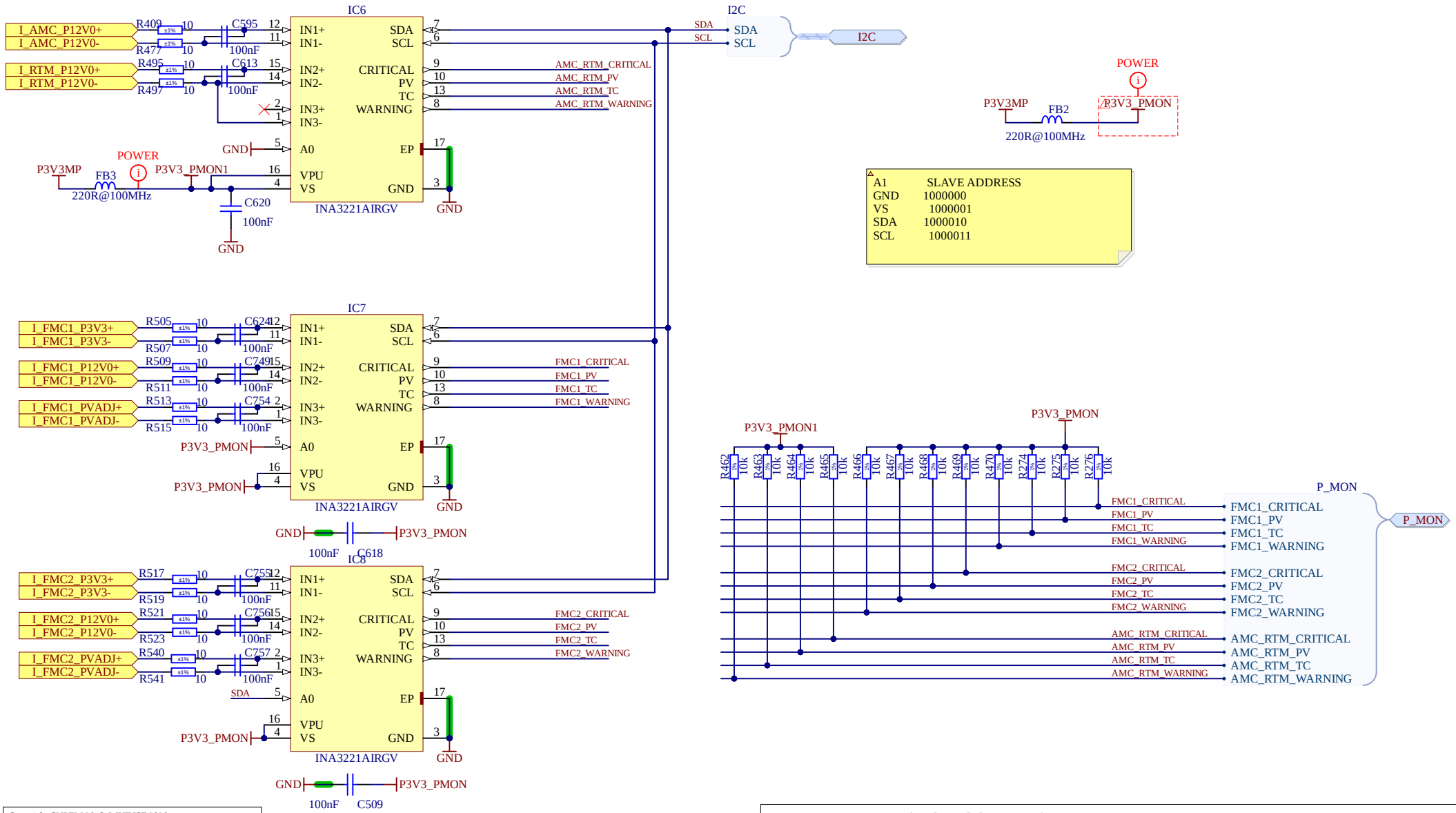

Copyright CNPEM 2013, WUT ISE 2020

This documentation describes Open Hardware and is licensed under CERN OHL v.1.1. You may redistribute and modify this documentaction under the terms of the CERN OHL v1.1. (http://ohwr.org/CERNOHL). This documentation is dristributed WITHOUT ANY EXPRESS OR IMPLIED WARRANTY, INCLUDING OF MERCHANTABLITY, SATISFACTORY QUALITY AND FITNESS FOR A PARTICULAR PURPOSE. Please see the CERN OHL v.1.1 for applicable conditions

Project/Equipment	AMC FMC Carrier v4.0.5		
Document	**AMC FMC Carrier v4.0.5 Power Measurement**	Designer	T. Przywozki
		Drawn by	XX/XX/XXXX
		Check.by	-
		Last Mod.	F. Świtakowski 21/07/2026
		File	UI_mon.SchDoc
		Print Date	05/08/2026 15:47:04
		Sheet	16 of 29

Warsaw University of Technology
Nowowiejska 15/19 00-665 Warsaw
ISE
Contact: t.przywozki@gmail.com

Size A4 Rev 1

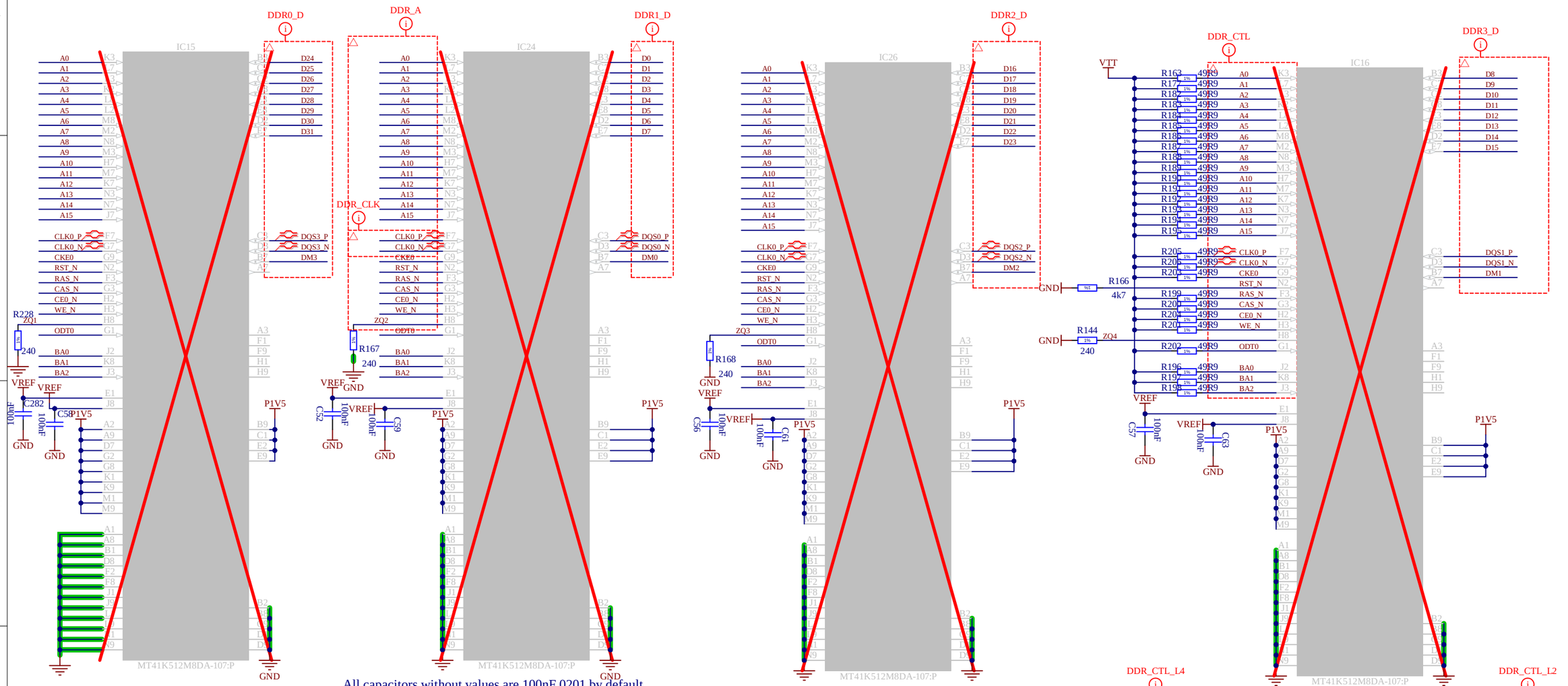

All capacitors without values are 100nF 0201 by default

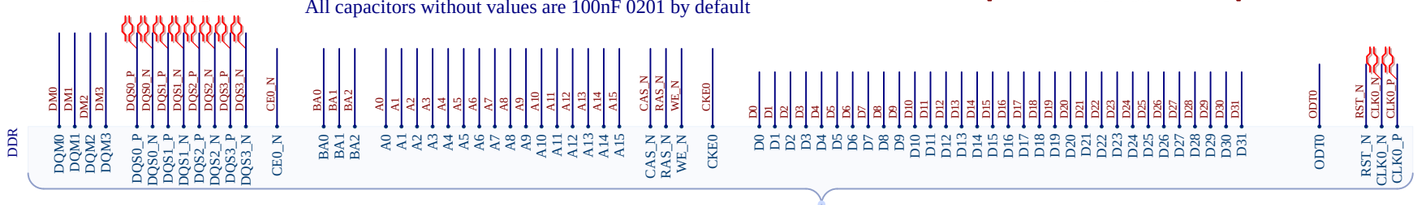

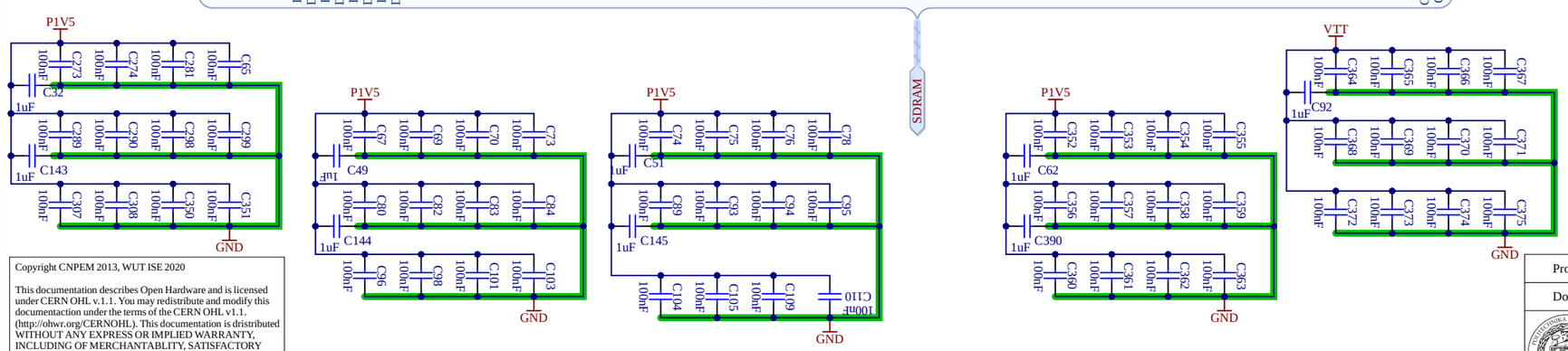

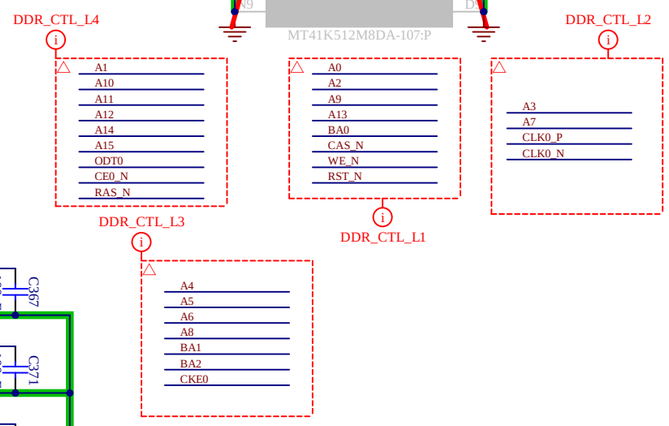

Copyright CNPEM 2013, WUT ISE 2020

This documentation describes Open Hardware and is licensed under CERN OHL v.1.1. You may redistribute and modify this documentation under the terms of the CERN OHL v1.1. (http://ohwr.org/CERNOHL). This documentation is dristributed WITHOUT ANY EXPRESS OR IMPLIED WARRANTY, INCLUDING OF MERCHANTABLITY, SATISFACTORY QUALITY AND FITNESS FOR A PARTICULAR PURPOSE. Please see the CERN OHL v.1.1 for applicable conditions

Project/Equipment: AMC FMC Carrier v4.0.5

Document: **AMC FMC Carrier v4.0.5 DDR3 32bit**

Designer	T. Przywozki	
Drawn by		
Check.by		-
Last Mod.	F. Switakowski	21/07/2026
File	SDRAM.SchDoc	
Print Date	05/08/2026 15:47:04	Sheet 17 of 29

Warsaw University of Technology ISE
Nowowiejska 15/19 00-665 Warsaw
Contact: t.przywozki@gmail.com

Size A3 | Rev 1

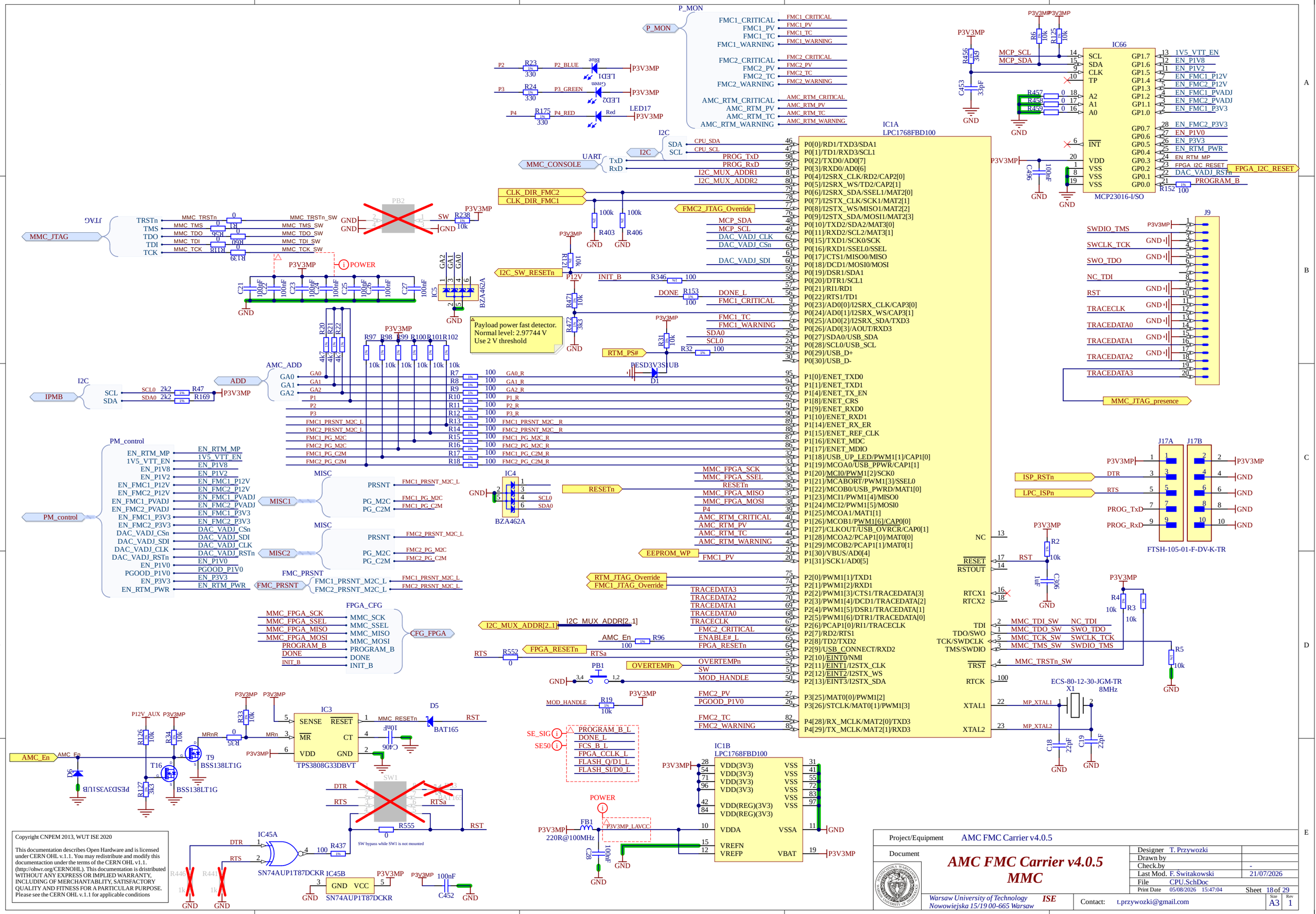
IC1A
LPC1768FBD100
IC66
MCP23016-I/SO
IC3
TPS3808G33DBVT
IC1B
LPC1768FBD100
J9
J17A
J17B
FTSH-105-01-F-DV-K-TR
X1
ECS-80-12-30-JGM-TR
8MHz
IC4
BZA462A
IC5
BZA462A
IC45A
SN74AUP1T87DCKR
IC45B
SN74AUP1T87DCKR
D1
PESD3V3S1UB
D5
BAT165
T9
BSS138LT1G
T16
BSS138LT1G
D6
PESD3V3S1UB
SW1
PB2
Payload power fast detector.
Normal level: 2.97744 V
Use 2 V threshold
SW bypass while SW1 is not mounted
Copyright CNPEM 2013, WUT ISE 2020
This documentation describes Open Hardware and is licensed under CERN OHL v.1.1. You may redistribute and modify this documentation under the terms of the CERN OHL v1.1. (http://ohwr.org/CERNOHL). This documentation is distributed WITHOUT ANY EXPRESS OR IMPLIED WARRANTY, INCLUDING OF MERCHANTABLITY, SATISFACTORY QUALITY AND FITNESS FOR A PARTICULAR PURPOSE. Please see the CERN OHL v.1.1 for applicable conditions
Project/Equipment AMC FMC Carrier v4.0.5
Document
AMC FMC Carrier v4.0.5
MMC
Designer T. Przywozki
Drawn by
Check.by -
Last Mod. F. Switakowski 21/07/2026
File CPU.SchDoc
Print Date 05/08/2026 15:47:04
Sheet 18 of 29
Size A3
Rev 1
Warsaw University of Technology
Nowowiejska 15/19 00-665 Warsaw
ISE
Contact: t.przywozki@gmail.com

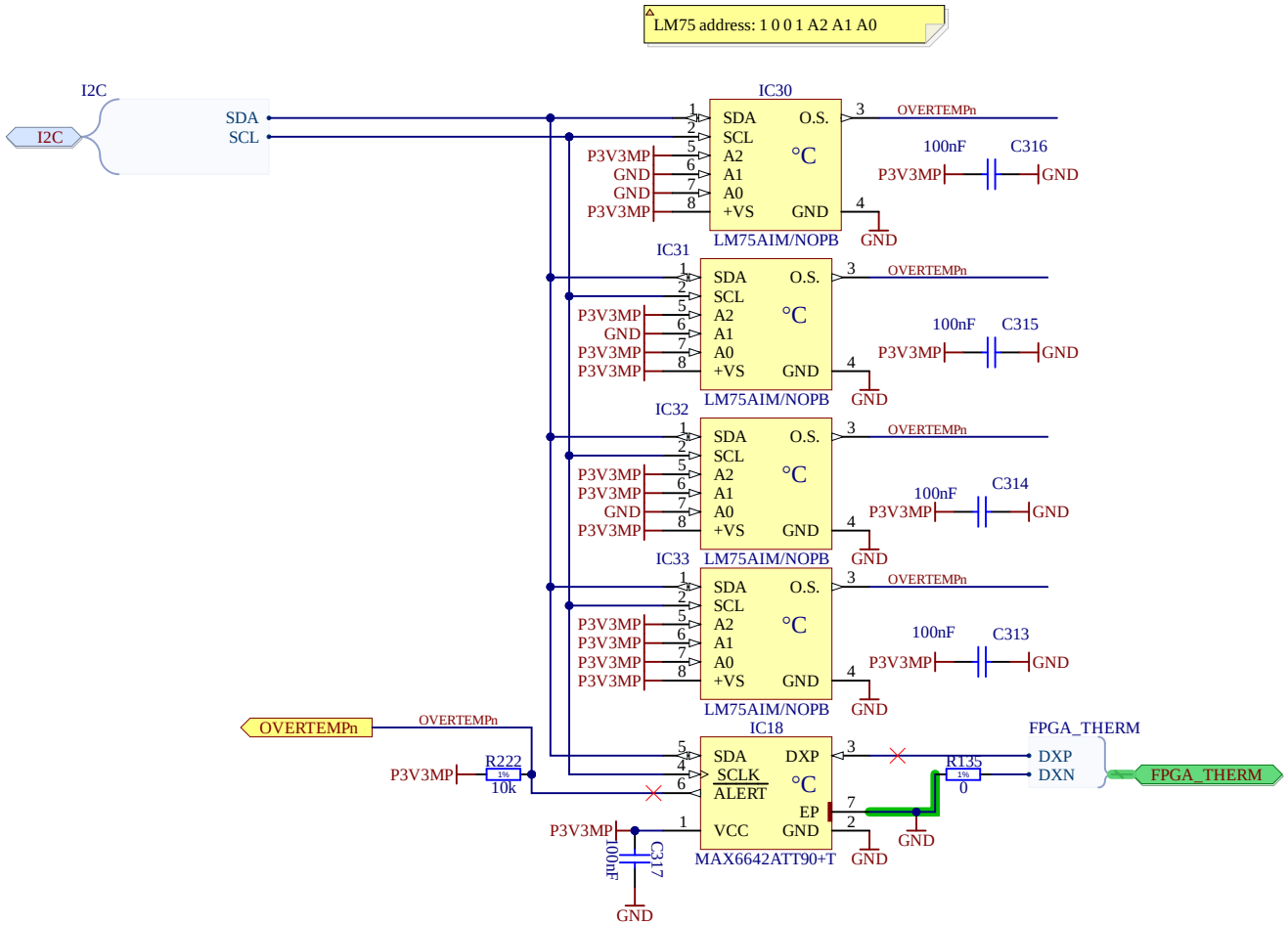

Copyright CNPEM 2013, WUT ISE 2020

This documentation describes Open Hardware and is licensed under CERN OHL v.1.1. You may redistribute and modify this documentaction under the terms of the CERN OHL v1.1. (http://ohwr.org/CERNOHL). This documentation is dristributed WITHOUT ANY EXPRESS OR IMPLIED WARRANTY, INCLUDING OF MERCHANTABLITY, SATISFACTORY QUALITY AND FITNESS FOR A PARTICULAR PURPOSE. Please see the CERN OHL v.1.1 for applicable conditions

Project/Equipment	AMC FMC Carrier v4.0.5		
Document	**AMC FMC Carrier v4.0.5 Thermometers**	Designer	T. Przywozki
		Drawn by	XX/XX/XXXX
		Check.by	-
		Last Mod.	F. Świtakowski 21/07/2026
		File	Thermometers.SchDoc
		Print Date	05/08/2026 15:47:04 Sheet 19 of 29

Warsaw University of Technology
Nowowiejska 15/19 00-665 Warsaw
ISE
Contact: t.przywozki@gmail.com

Size A4 Rev 1

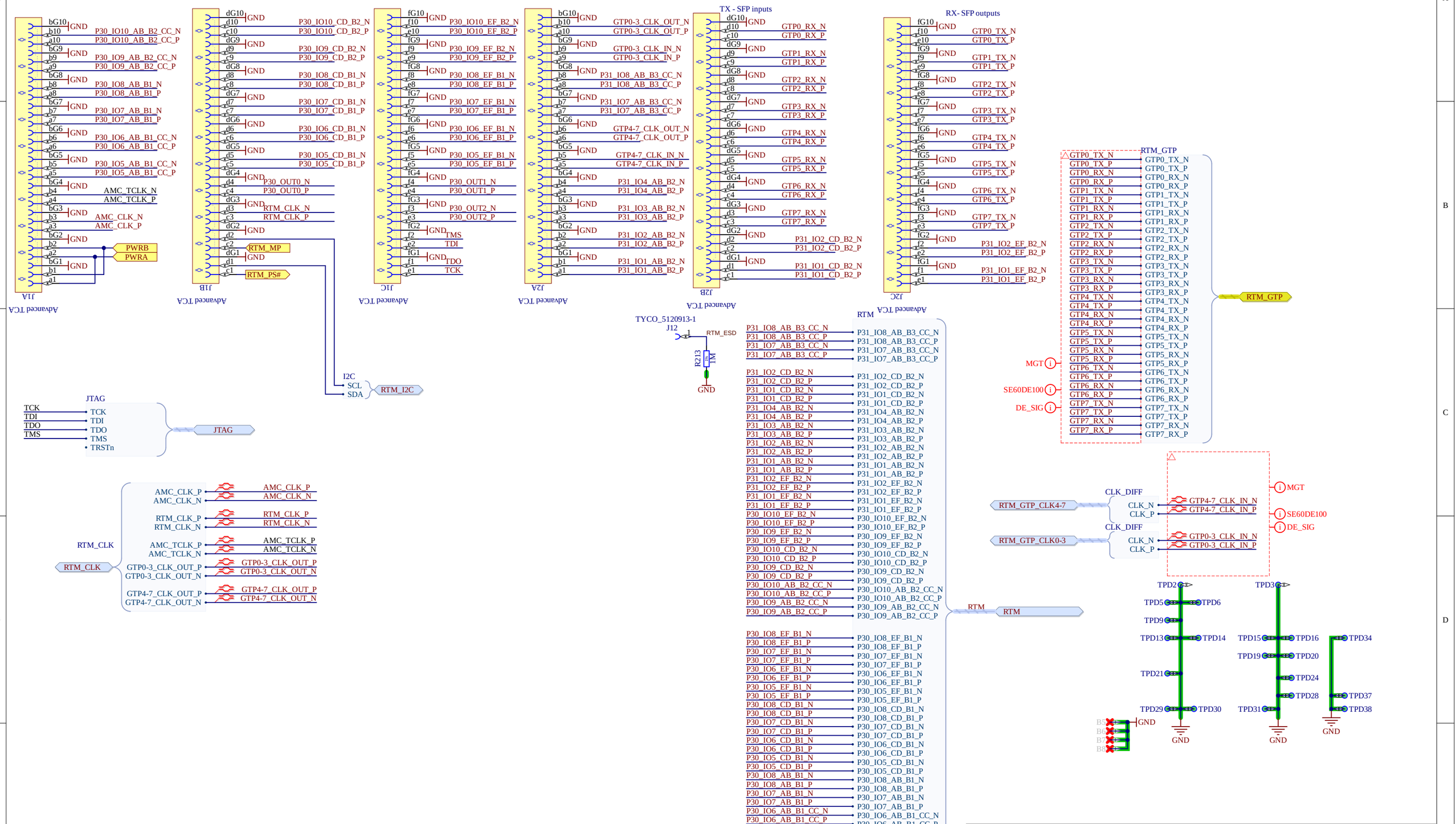

Copyright CNPEM 2013, WUT ISE 2020

This documentation describes Open Hardware and is licensed under CERN OHL v.1.1. You may redistribute and modify this documentation under the terms of the CERN OHL v1.1. (http://ohwr.org/CERNOHL). This documentation is dristributed WITHOUT ANY EXPRESS OR IMPLIED WARRANTY, INCLUDING OF MERCHANTABLITY, SATISFACTORY QUALITY AND FITNESS FOR A PARTICULAR PURPOSE. Please see the CERN OHL v.1.1 for applicable conditions

Project/Equipment	AMC FMC Carrier v4.0.5		
Document	**AMC FMC Carrier v4.0.5 RTM Connector**	Designer	T. Przywozki
		Drawn by	
		Check.by	-
		Last Mod.	F. Switakowski 21/07/2026
		File	RTM_CON.SchDoc
		Print Date	05/08/2026 15:47:04 Sheet 20 of 29
Warsaw University of Technology Nowowiejska 15/19 00-665 Warsaw	*ISE*	Contact:	t.przywozki@gmail.com
		Size	A3
		Rev	1

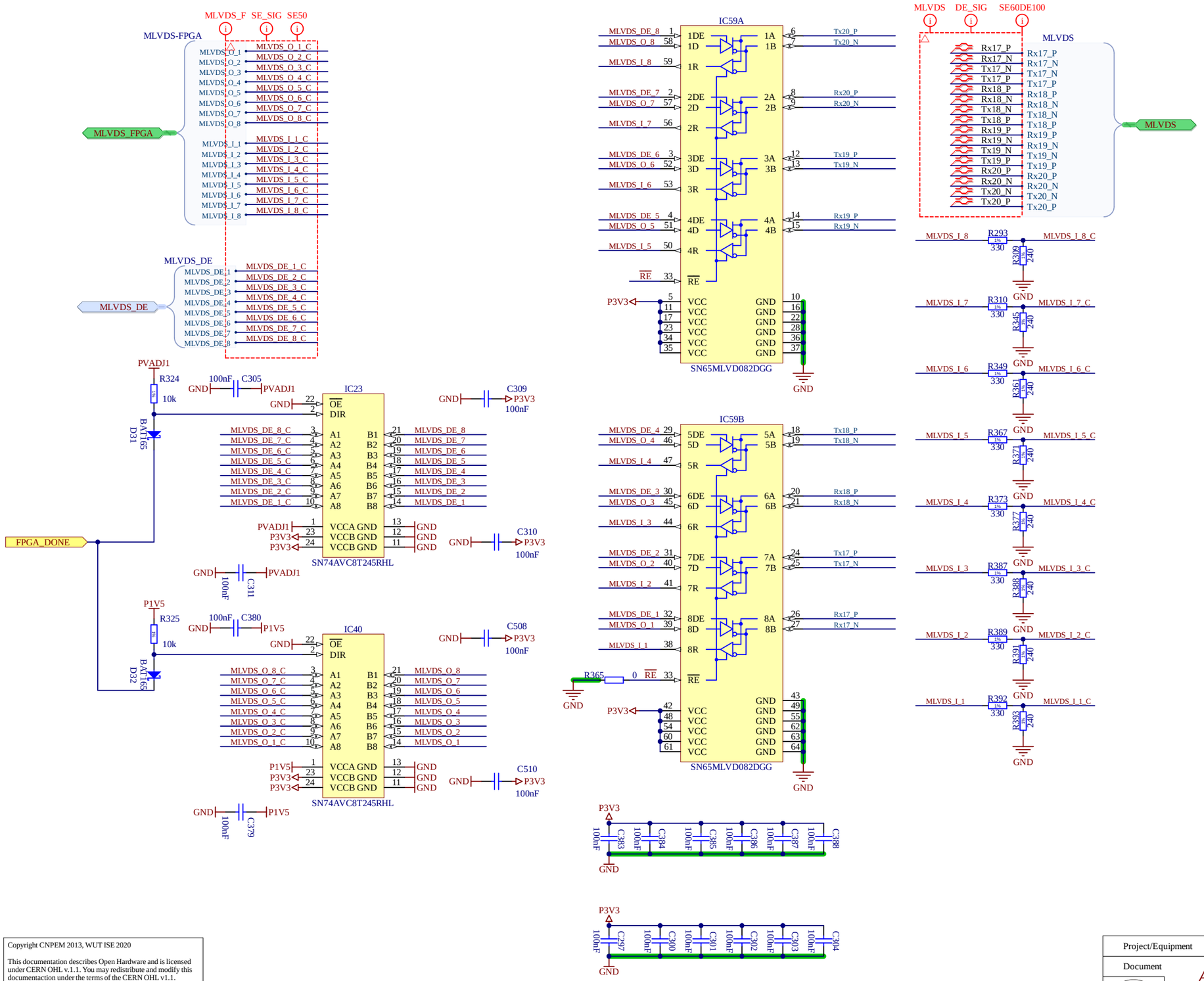

Copyright CNPEM 2013, WUT ISE 2020

This documentation describes Open Hardware and is licensed under CERN OHL v.1.1. You may redistribute and modify this documentaction under the terms of the CERN OHL v1.1. (http://ohwr.org/CERNOHL). This documentation is dristributed WITHOUT ANY EXPRESS OR IMPLIED WARRANTY, INCLUDING OF MERCHANTABLITY, SATISFACTORY QUALITY AND FITNESS FOR A PARTICULAR PURPOSE. Please see the CERN OHL v.1.1 for applicable conditions

Project/Equipment	AMC FMC Carrier v4.0.5		
Document	**AMC FMC Carrier v4.0.5 M-LVDS PHY**	Designer	T. Przywozki
		Drawn by	
		Check.by	-
		Last Mod.	F. Switakowski 21/07/2026
		File	M-LVDS PHY.SchDoc
		Print Date	05/08/2026 15:47:04 Sheet 21 of 29

Warsaw University of Technology *ISE*
Nowowiejska 15/19 00-665 Warsaw
Contact: t.przywozki@gmail.com

Size A3 Rev 1

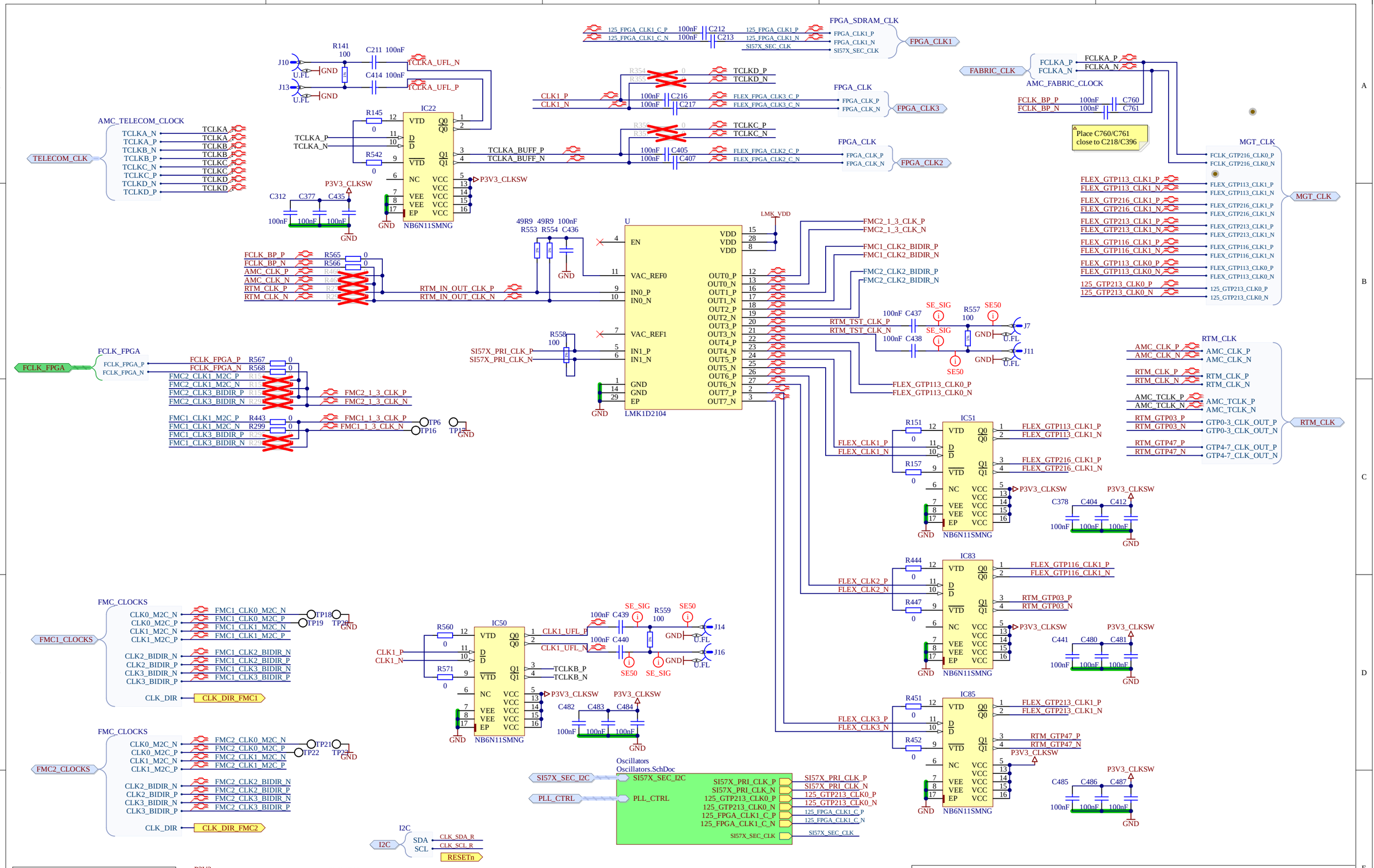

Copyright CNPEM 2013, WUT ISE 2020

This documentation describes Open Hardware and is licensed under CERN OHL v.1.1. You may redistribute and modify this documentation under the terms of the CERN OHL v1.1. (http://ohwr.org/CERNOHL). This documentation is distributed WITHOUT ANY EXPRESS OR IMPLIED WARRANTY, INCLUDING OF MERCHANTABLITY, SATISFACTORY QUALITY AND FITNESS FOR A PARTICULAR PURPOSE. Please see the CERN OHL v.1.1 for applicable conditions

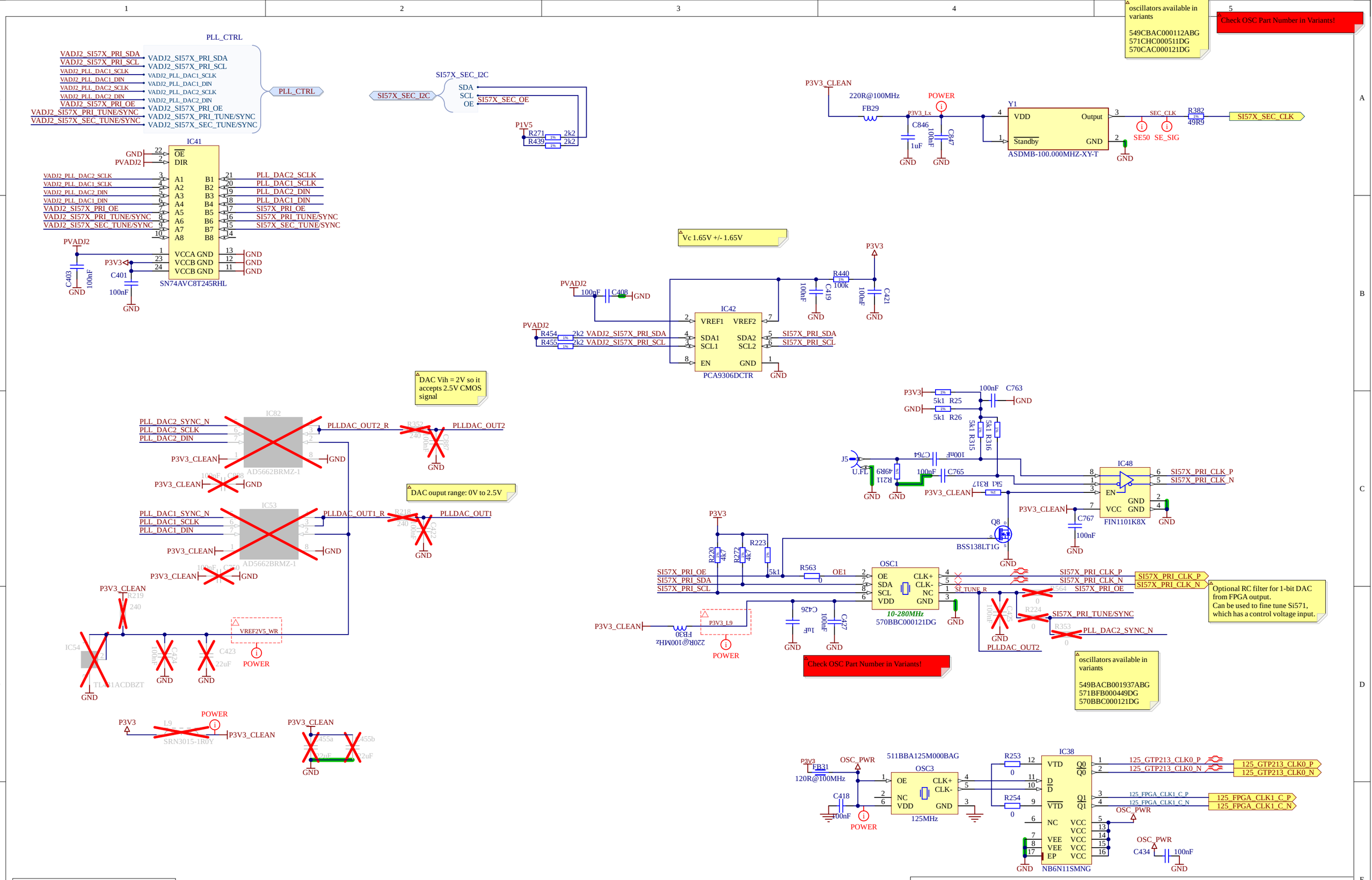

Copyright CNPEM 2013, WUT ISE 2020

This documentation describes Open Hardware and is licensed under CERN OHL v.1.1. You may redistribute and modify this documentation under the terms of the CERN OHL v1.1. (http://ohwr.org/CERNOHL). This documentation is dristributed WITHOUT ANY EXPRESS OR IMPLIED WARRANTY, INCLUDING OF MERCHANTABLITY, SATISFACTORY QUALITY AND FITNESS FOR A PARTICULAR PURPOSE. Please see the CERN OHL v.1.1 for applicable conditions

Project/Equipment	AMC FMC Carrier v4.0.5
Document	**AMC FMC Carrier v4.0.5 Oscillators**
Designer	T. Przywozki
Drawn by	
Check.by	-
Last Mod.	F. Switakowski 21/07/2026
File	Oscillators.SchDoc
Print Date	05/08/2026 15:47:05
Sheet	23 of 29
Size	A3
Rev	1

Warsaw University of Technology
Nowowiejska 15/19 00-665 Warsaw
ISE
Contact: t.przywozki@gmail.com

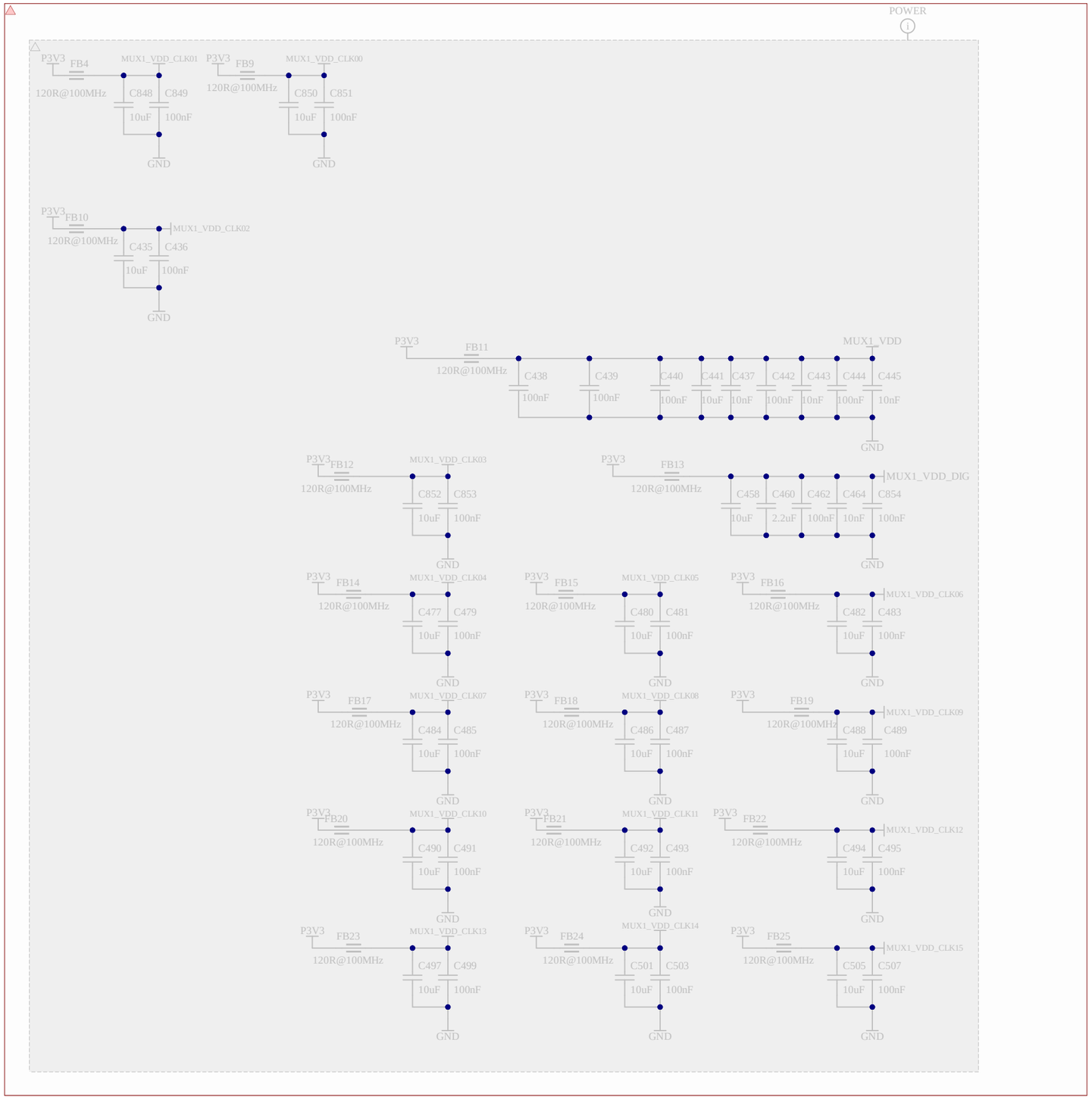

Copyright CNPEM 2013, WUT ISE 2020

This documentation describes Open Hardware and is licensed under CERN OHL v.1.1. You may redistribute and modify this documentation under the terms of the CERN OHL v1.1. (http://ohwr.org/CERNOHL). This documentation is dristributed WITHOUT ANY EXPRESS OR IMPLIED WARRANTY, INCLUDING OF MERCHANTABLITY, SATISFACTORY QUALITY AND FITNESS FOR A PARTICULAR PURPOSE. Please see the CERN OHL v.1.1 for applicable conditions

Project/Equipment	AMC FMC Carrier v4.0.5		
Document	**AMC FMC Carrier v4.0.5 8V54816A Supply**	Designer	T. Przywozki
		Drawn by	
		Check.by	-
		Last Mod.	F. Switakowski 21/07/2026
		File	8V54816A_SUPPLY.SchDoc
		Print Date	05/08/2026 15:47:05 Sheet 24 of 29

Warsaw University of Technology **ISE**
Nowowiejska 15/19 00-665 Warsaw
Contact: t.przywozki@gmail.com

Size A3 Rev 1

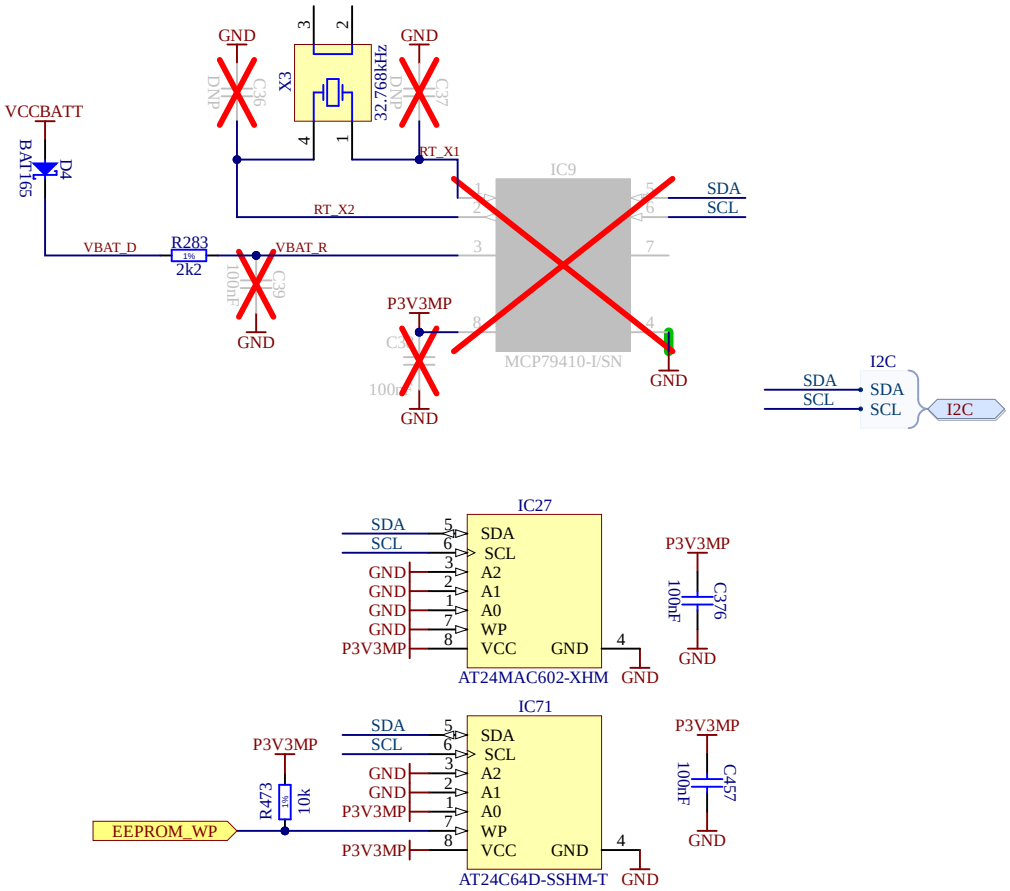

Copyright CNPEM 2013, WUT ISE 2020

This documentation describes Open Hardware and is licensed under CERN OHL v.1.1. You may redistribute and modify this documentaction under the terms of the CERN OHL v1.1. (http://ohwr.org/CERNOHL). This documentation is dristributed WITHOUT ANY EXPRESS OR IMPLIED WARRANTY, INCLUDING OF MERCHANTABLITY, SATISFACTORY QUALITY AND FITNESS FOR A PARTICULAR PURPOSE. Please see the CERN OHL v.1.1 for applicable conditions

Project/Equipment	AMC FMC Carrier v4.0.5		
Document	**AMC FMC Carrier v4.0.5 RTCE & EEPROM**	Designer	T. Przywozki
		Drawn by	XX/XX/XXXX
		Check.by	-
		Last Mod.	F. Świtakowski 21/07/2026
		File	RTCE.SchDoc
		Print Date	05/08/2026 15:47:05 Sheet 26 of 29

Warsaw University of Technology
Nowowiejska 15/19 00-665 Warsaw
ISE
Contact: t.przywozki@gmail.com

Size A4 Rev 1

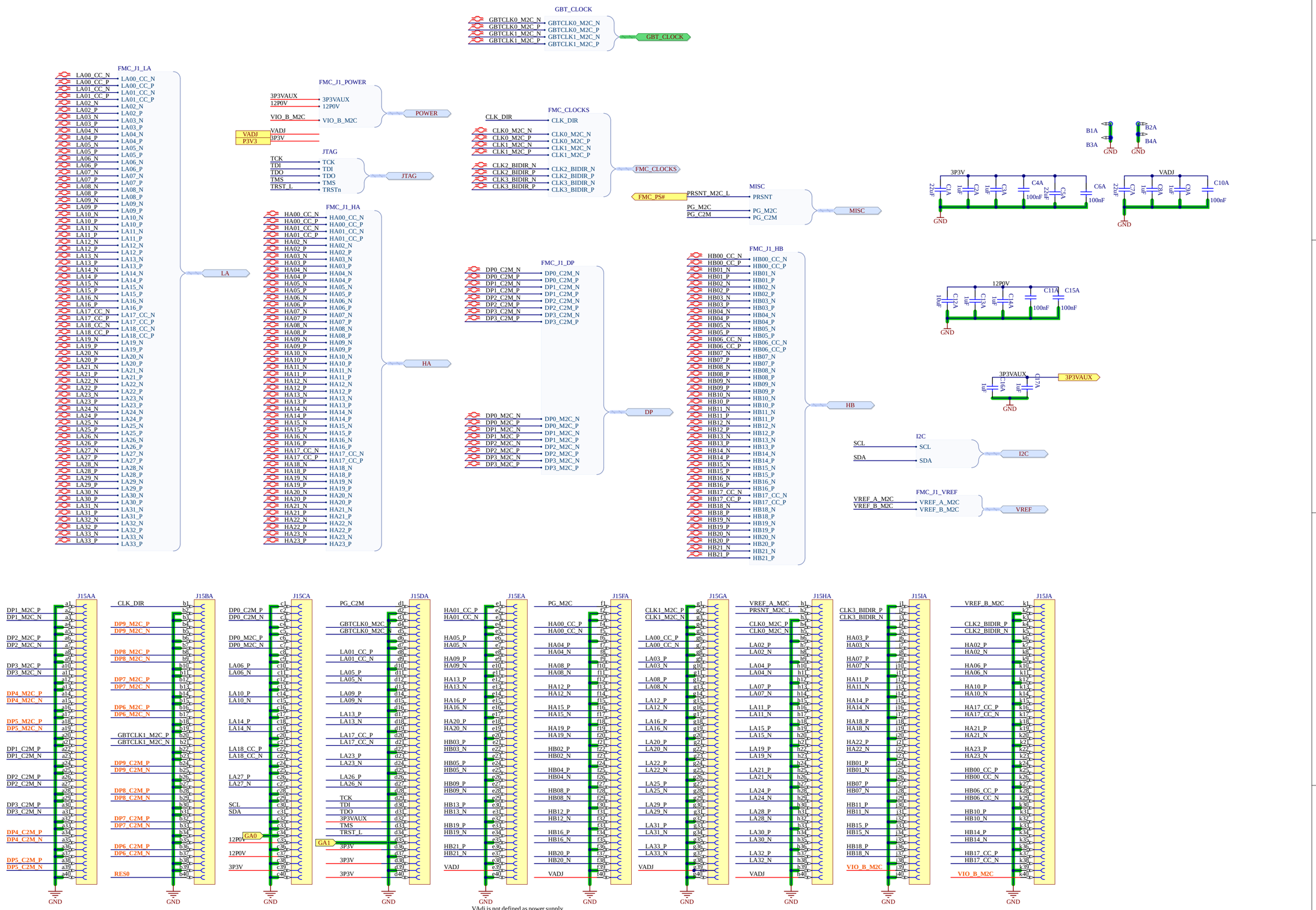

VAdj is not defined as power supply and therefore as global signal as it might differ for the 2 FMC

Copyright CNPEM 2013, WUT ISE 2020

This documentation describes Open Hardware and is licensed under CERN OHL v.1.1. You may redistribute and modify this documentation under the terms of the CERN OHL v1.1. (http://ohwr.org/CERNOHL). This documentation is distributed WITHOUT ANY EXPRESS OR IMPLIED WARRANTY, INCLUDING OF MERCHANTABLITY, SATISFACTORY QUALITY AND FITNESS FOR A PARTICULAR PURPOSE. Please see the CERN OHL v.1.1 for applicable conditions

Project/Equipment: AMC FMC Carrier v4.0.5

Document: **AMC FMC Carrier v4.0.5 FMC connector**

Designer	T. Przywozki	
Drawn by		
Check.by		-
Last Mod.	F. Świtakowski	21/07/2026
File	FMC_connector.SchDoc	
Print Date	05/08/2026 15:47:05	Sheet 27 of 29

Warsaw University of Technology
Nowowiejska 15/19 00-665 Warsaw
ISE
Contact: t.przywozki@gmail.com

Size: A2 Rev: 1

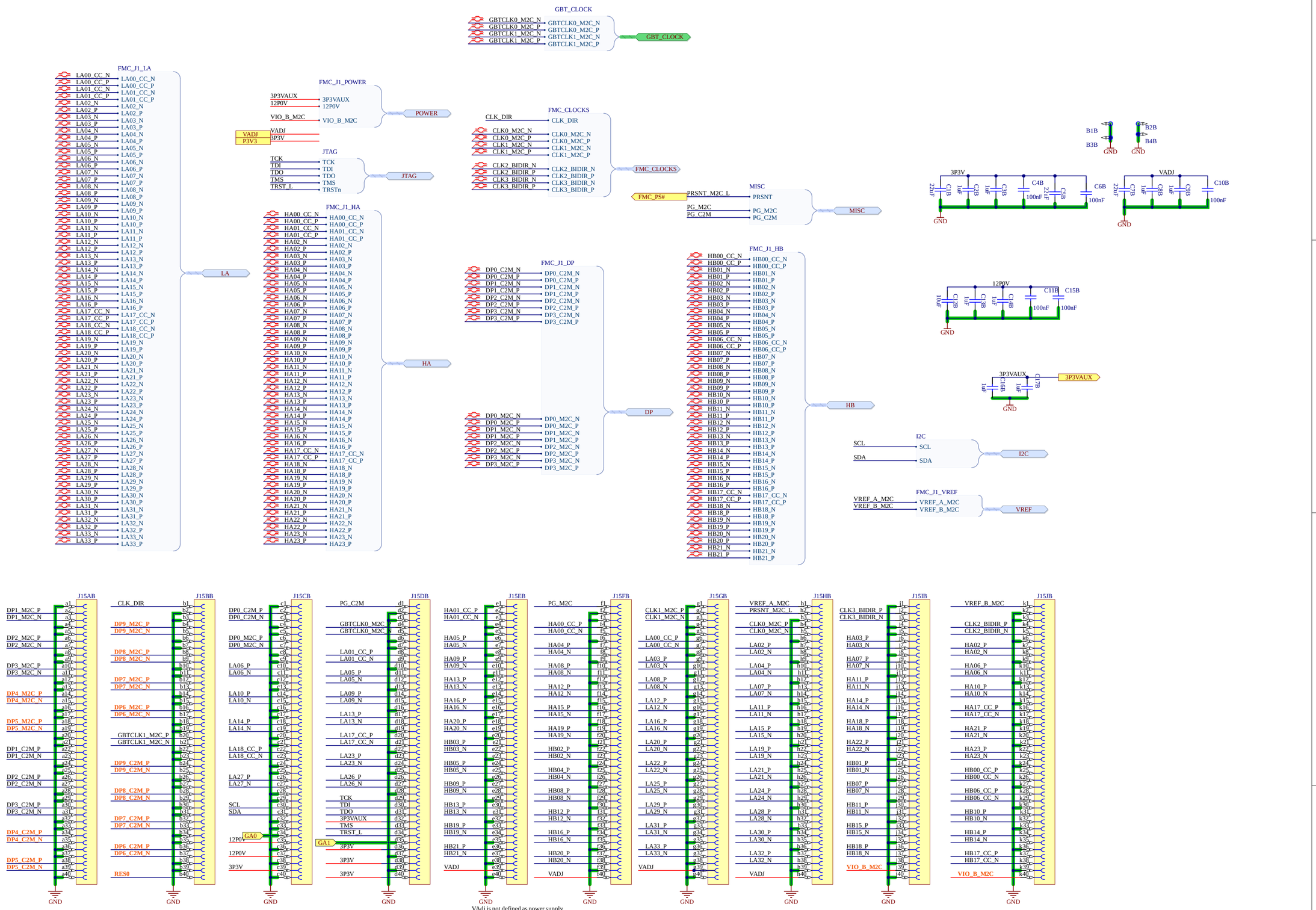

VAdj is not defined as power supply and therefore as global signal as it might differ for the 2 FMC

Copyright CNPEM 2013, WUT ISE 2020

This documentation describes Open Hardware and is licensed under CERN OHL v.1.1. You may redistribute and modify this documentation under the terms of the CERN OHL v1.1. (http://ohwr.org/CERNOHL). This documentation is distributed WITHOUT ANY EXPRESS OR IMPLIED WARRANTY, INCLUDING OF MERCHANTABLITY, SATISFACTORY QUALITY AND FITNESS FOR A PARTICULAR PURPOSE. Please see the CERN OHL v.1.1 for applicable conditions

Project/Equipment: AMC FMC Carrier v4.0.5

Document: **AMC FMC Carrier v4.0.5 FMC connector**

Designer	T. Przywozki	
Drawn by		
Check.by		-
Last Mod.	F. Świtakowski	21/07/2026
File	FMC_connector.SchDoc	
Print Date	05/08/2026 15:47:05	Sheet 27 of 29

Warsaw University of Technology
Nowowiejska 15/19 00-665 Warsaw
ISE
Contact: t.przywozki@gmail.com

Size: A2 | Rev: 1

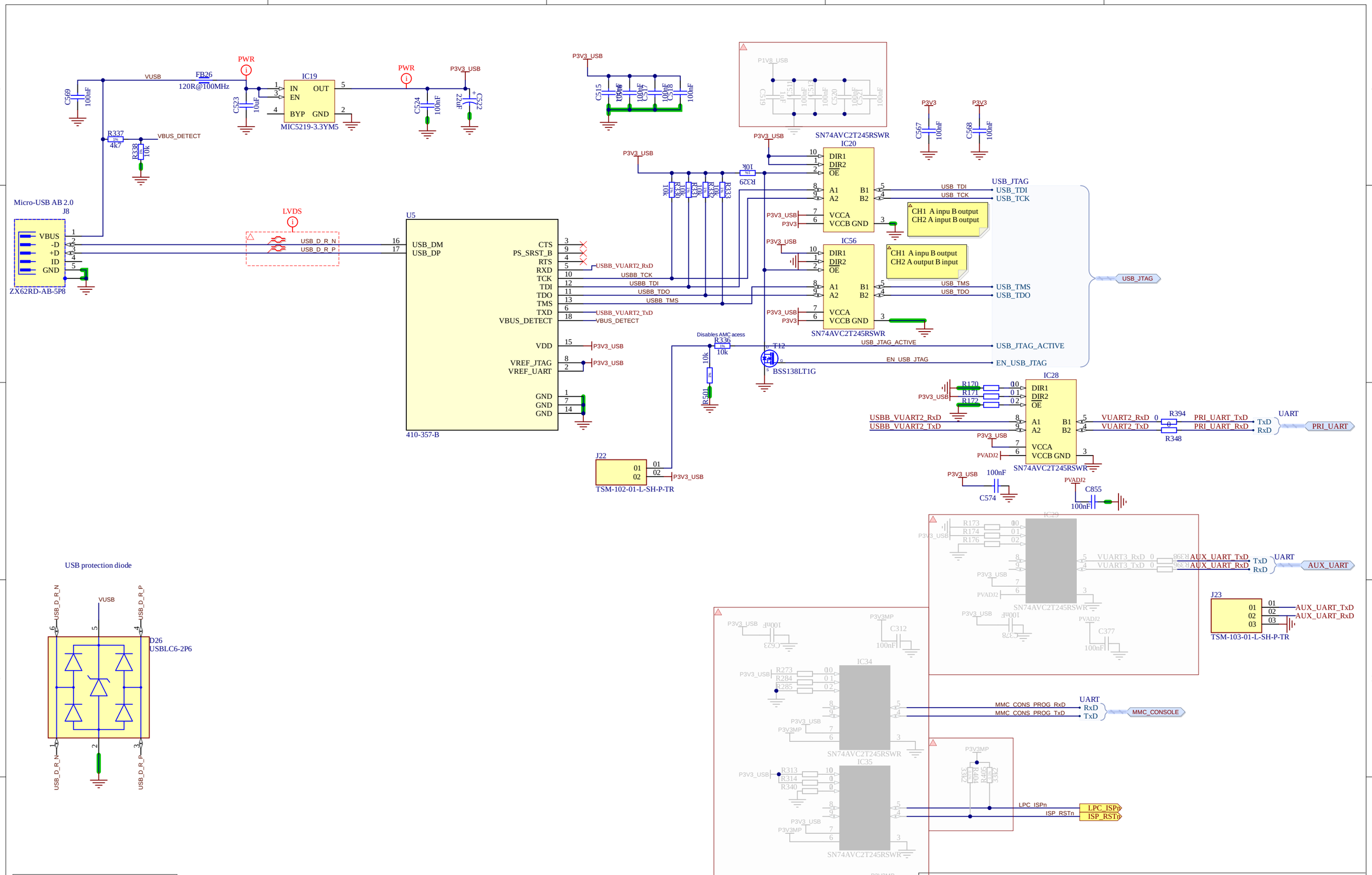

Copyright CNPEM 2013, WUT ISE 2020

This documentation describes Open Hardware and is licensed under CERN OHL v.1.1. You may redistribute and modify this documentation under the terms of the CERN OHL v1.1. (http://ohwr.org/CERNOHL). This documentation is dristributed WITHOUT ANY EXPRESS OR IMPLIED WARRANTY, INCLUDING OF MERCHANTABLITY, SATISFACTORY QUALITY AND FITNESS FOR A PARTICULAR PURPOSE. Please see the CERN OHL v.1.1 for applicable conditions

Project/Equipment: AMC FMC Carrier v4.0.5

Document: **AMC FMC Carrier v4.0.5 Quad USB - serial**

Designer	T. Przywozki	
Drawn by		
Check.by		-
Last Mod.	F. Switakowski	24/07/2026
File	USB_SERIAL_QUAD.SchDoc	
Print Date	05/08/2026 15:47:05	Sheet 28 of 29

Warsaw University of Technology *ISE*
Nowowiejska 15/19 00-665 Warsaw
Contact: t.przywozki@gmail.com

Size A3 Rev 1

I2C switch footprint is compatible with MAX7358 which has interesting anti-lock capabilities

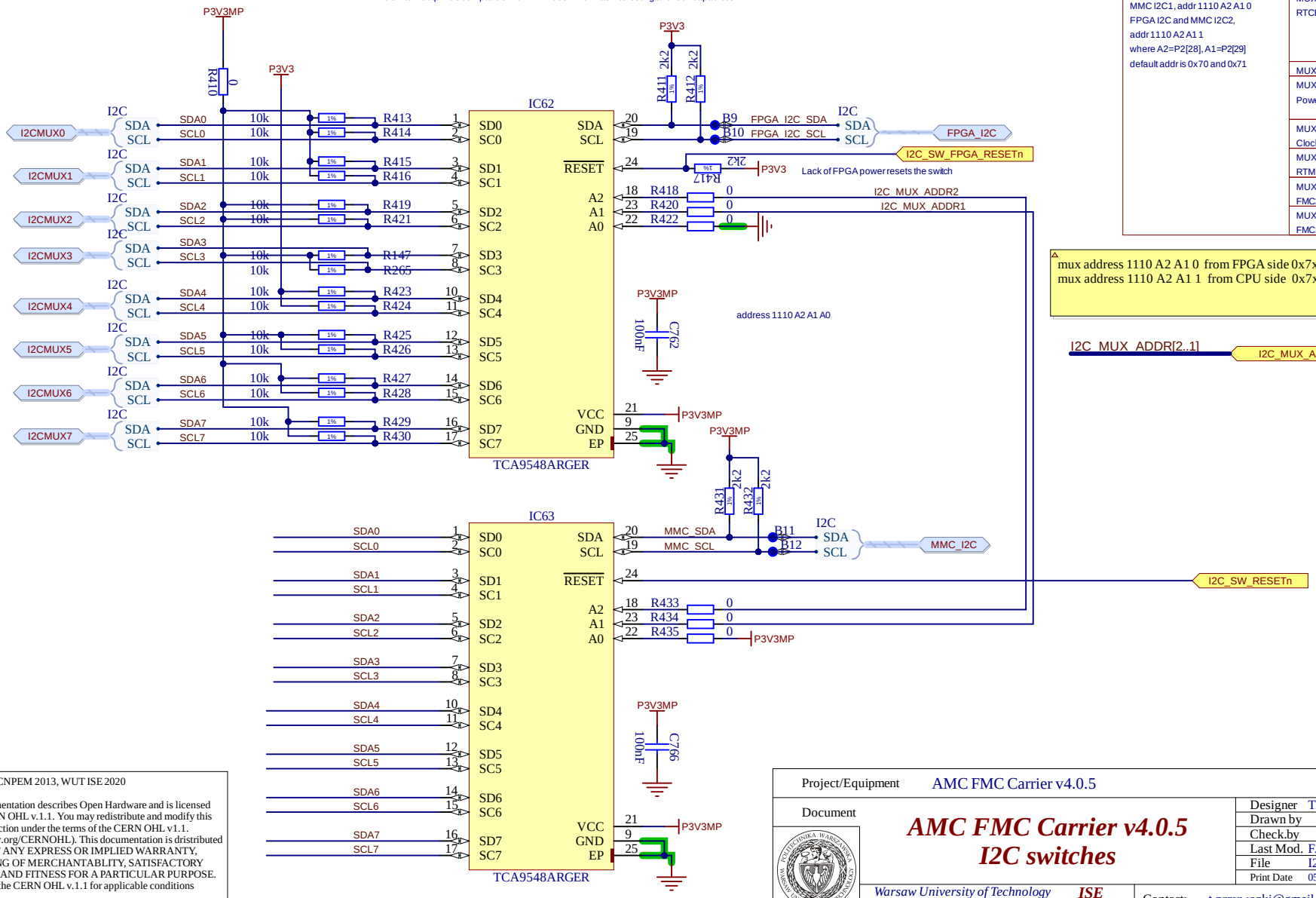

I2C device address map

The resources are available from TCA9548s SW:
MMC I2C1, addr 1110 A2 A1 0
FPGA I2C and MMC I2C2, addr 1110 A2 A1 1
where A2=P2[28], A1=P2[29]
default addr is 0x70 and 0x71

MUX Port 0	Temp sensors	MAX6642 0x48
		LM75: 0x4C
		LM75: 0x4D
		LM75: 0x4E
		LM75: 0x4F
MUX Port 1	RTCE	RTC EEPROM: 0x57
		SRAM/RTCC reg: 0x6F
		EEPROM 2k: 0x50
		EUI-ID: 0x59
		EEPROM 64k: 0x51
MUX Port 2		
MUX Port 3	Power	INA3221AIRGV: 0x40
		INA3221AIRGV: 0x41
		INA3221AIRGV: 0x42
MUX Port 4	Clock switch	8V54816ANLG: 0x5B
MUX Port 5	RTM	RTM devices
MUX Port 6	FMC2	EEPROM 0x52
MUX Port 7	FMC1	EEPROM 0x50

mux address 1110 A2 A1 0 from FPGA side 0x7x
mux address 1110 A2 A1 1 from CPU side 0x7x

I2C_MUX_ADDR[2..1] I2C_MUX_ADDR[2..1]

Copyright CNPEM 2013, WUT ISE 2020

This documentation describes Open Hardware and is licensed under CERN OHL v.1.1. You may redistribute and modify this documentaction under the terms of the CERN OHL v1.1. (http://ohwr.org/CERNOHL). This documentation is dristributed WITHOUT ANY EXPRESS OR IMPLIED WARRANTY, INCLUDING OF MERCHANTABLITY, SATISFACTORY QUALITY AND FITNESS FOR A PARTICULAR PURPOSE. Please see the CERN OHL v.1.1 for applicable conditions

Project/Equipment: AMC FMC Carrier v4.0.5

Document

AMC FMC Carrier v4.0.5
I2C switches

Designer	T. Przywozki	
Drawn by		
Check.by		-
Last Mod.	F. Świtakowski	21/07/2026
File	I2C_MUX.SchDoc	
Print Date	05/08/2026 15:47:05	Sheet 29 of 29

Warsaw University of Technology ISE
Nowowiejska 15/19 00-665 Warsaw
Contact: t.przywozki@gmail.com

Size A4 Rev 1